# B2M Block Diagram

**SC**

**2003/01/03**

Project Code 91.49T01.001
M/B 48.45Z01.0SC 02216-SC

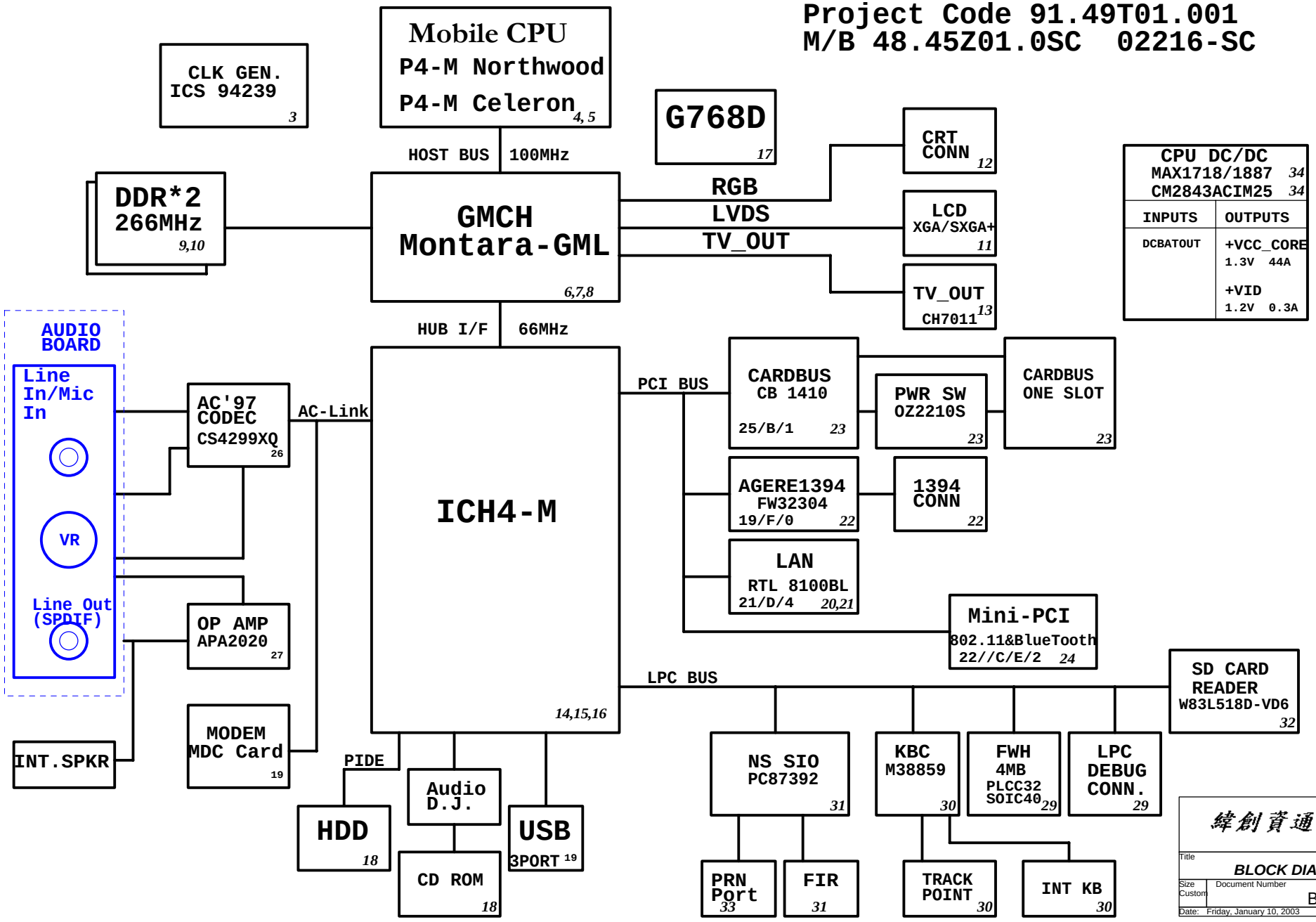


| CPU DC/DC MAX1718/1887 34 CM2843ACIM25 34 | |
|---|---|
| INPUTS | OUTPUTS |
| DCBATOUT | +VCC_CORE 1.3V 44A<br>+VID 1.2V 0.3A |

| SYSTEM DC/DC MAX1631 36 | |
|---|---|
| INPUTS | OUTPUTS |
| DCBATOUT | 5V_S5<br>5V_S3<br>5V_S0<br>3D3V_S5<br>3D3V_S3<br>3D3V_S0<br>3D3V_LANAC |

| SYSTEM DC/DC MAX1715 35 | |
|---|---|
| INPUTS | OUTPUTS |
| DCBATOUT | 2D5V_S3<br>1D2V_S0 |

| SI3012 35 | |
|---|---|
| 2D5V_S3 | 1D5V_S0 |

| LP2995 35 | |
|---|---|
| 2D5V_S3 | 1D25V_S0 |

| MAXIM CHARGER MAX1645 37 | |
|---|---|
| INPUTS | OUTPUTS |
| DCBATOUT | BT+ 18V 4.0A<br>UP+5V 5V 100mA |

**PCB LAYER**

- L1: Signal 1
- L2: GND
- L3: Power
- L4: VCC
- L5: Signal 3
- L6: GND
- L7: Signal 4
- L8: Signal 5


緯創資通 Wistron Corporation
21F, 88, Sec.1, Hsin Tai Wu Rd., Hsichih,
Taipei Hsien 221, Taiwan, R.O.C.


Title: BLOCK DIAGRAM

Size: Custom | Document Number: B2M | Rev: SC

Date: Friday, January 10, 2003 | Sheet 1 of 43

1D5V_S0 — 1D5V_S0 7,8,13,14,16,29,35

1D5V_S5 — 1D5V_S5 16,36

VCC_RTC_S5 — VCC_RTC_S5 15

3D3V_S0 — 3D3V_S0 3,4,7,8,9,11,12,13,14,15,16,17,18,19,20,22,23,24,26,29,31,32,34,39,42

3D3V_S3 — 3D3V_S3 11,19,26,30,39

3D3V_S5 — 3D3V_S5 5,14,15,16,23,26,36,38,39,41

5V_S0 — 5V_S0 11,12,15,16,17,18,19,23,24,25,26,29,30,31,32,33,34,38,39

5V_S3 — 5V_S3 30,35,39,40

5V_S5 — 5V_S5 11,16,27,36,39

5VA_AUD_S0 — 5VA_AUD_S0 26,27,42

5V_USB1_S0 — 5V_USB1_S0 19

LCDVDD — LCDVDD 11

5V_CRT_S0 — 5V_CRT_S0 12

AD+ — AD+ 17,37,38,40

DCBATOUT — DCBATOUT 11,17,34,35,36,37,39,41

ICH_VBIAS — ICH_VBIAS 15

RTC_AUX_S5 — RTC_AUX_S5 15

MAX1631_VL — MAX1631_VL 36

FAN1_VCC — FAN1_VCC 17

VCC_ASKT_S0 — VCC_ASKT_S0 23

VPP_ASKT_S0 — VPP_ASKT_S0 23

1394_AVDD — 1394_AVDD 22

5V_USB0_S0 — 5V_USB0_S0 19

## PCI DEVICE RESOURCE ASSIGNMENT

| | BUS | DEVICE | IDSEL | PCI_REQ# | PCI_GNT# | INT_IRQ# |
|---|---|---|---|---|---|---|
| | | | | | | |
| LAN | 1 | 5 | PCI_AD21 | REQ#4 | GNT#4 | IRQD# |
| CardBus | 1 | 9 | PCI_AD25 | REQ#1 | GNT#1 | IRQB# |
| VIA1394 | 1 | 3 | PCI_AD19 | REQ#0 | GNT#0 | IRQF# |
| MiniPCI | 1 | 6 | PCI_AD22 | REQ#2 | GNT#2 | IRQC# / IRQE# |
| | | | | | | |


緯創資通 Wistron Corporation
21F, 88, Sec.1, Hsin Tai Wu Rd., Hsichih,
Taipei Hsien 221, Taiwan, R.O.C.


Title: *Table of Content / HISTORY*

Size: A3 | Document Number: B2M | Rev: SC

Date: Friday, January 10, 2003 | Sheet 2 of 43

WWW.AliSaler.Com

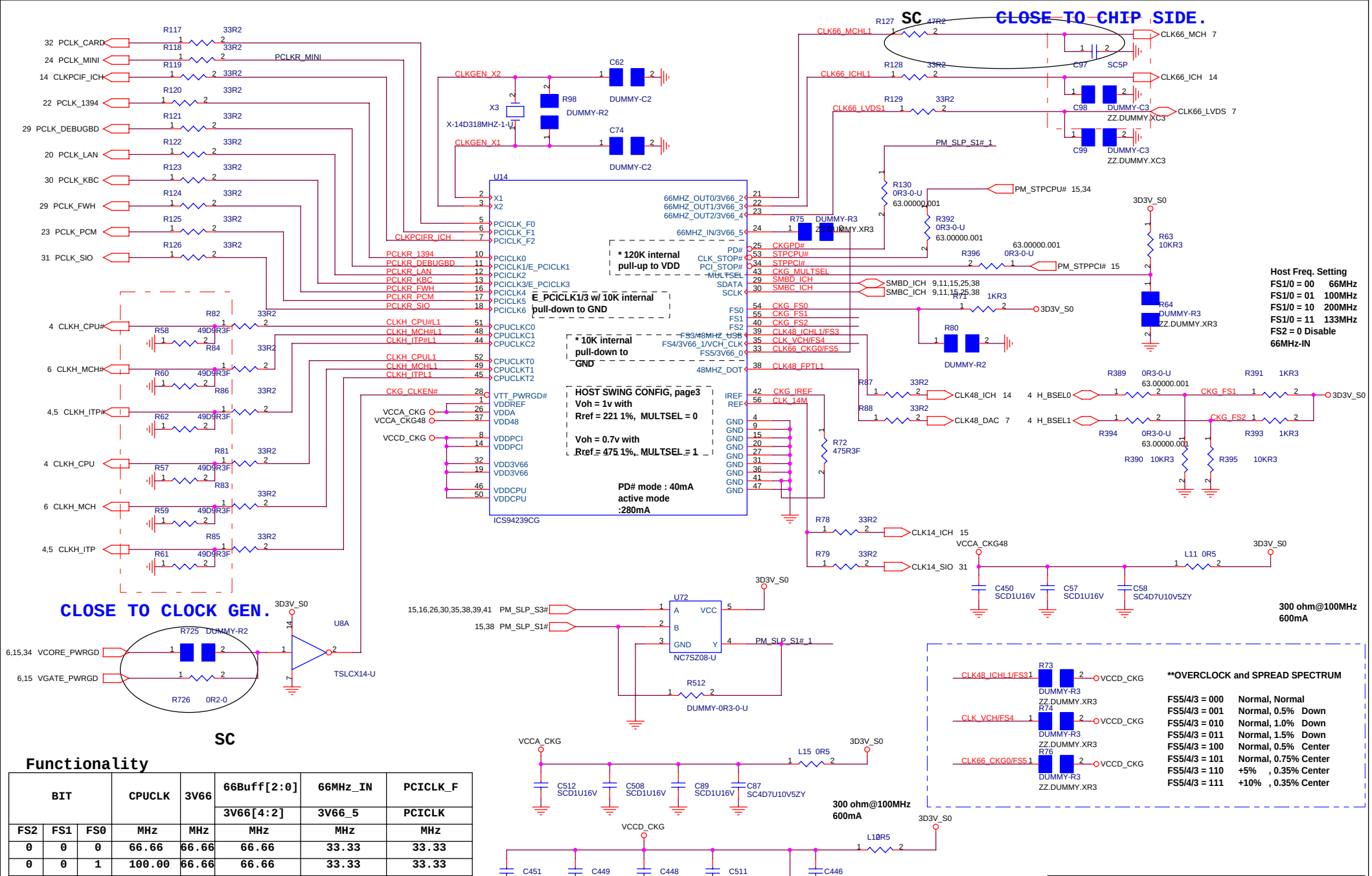


SC

## Functionality

| BIT | | | CPUCLK | 3V66 | 66Buff[2:0] | 66MHz_IN | PCICLK_F |
|---|---|---|---|---|---|---|---|
| | | | | | 3V66[4:2] | 3V66_5 | PCICLK |
| FS2 | FS1 | FS0 | MHz | MHz | MHz | MHz | MHz |
| 0 | 0 | 0 | 66.66 | 66.66 | 66.66 | 33.33 | 33.33 |
| 0 | 0 | 1 | 100.00 | 66.66 | 66.66 | 33.33 | 33.33 |
| 0 | 1 | 0 | 200.00 | 66.66 | 66.66 | 33.33 | 33.33 |
| 0 | 1 | 1 | 133.33 | 66.66 | 66.66 | 33.33 | 33.33 |
| 1 | 0 | 0 | 66.66 | 66.66 | 66MHz_IN | Input | 66MHz_IN/2 |
| 1 | 0 | 1 | 100.00 | 66.66 | 66MHz_IN | Input | 66MHz_IN/2 |
| 1 | 1 | 0 | 200.00 | 66.66 | 66MHz_IN | Input | 66MHz_IN/2 |
| 1 | 1 | 1 | 133.33 | 66.66 | 66MHz_IN | Input | 66MHz_IN/2 |

# CPU Socket
# AMP: 62.01153.061
# FOXCON: 62.10055.011

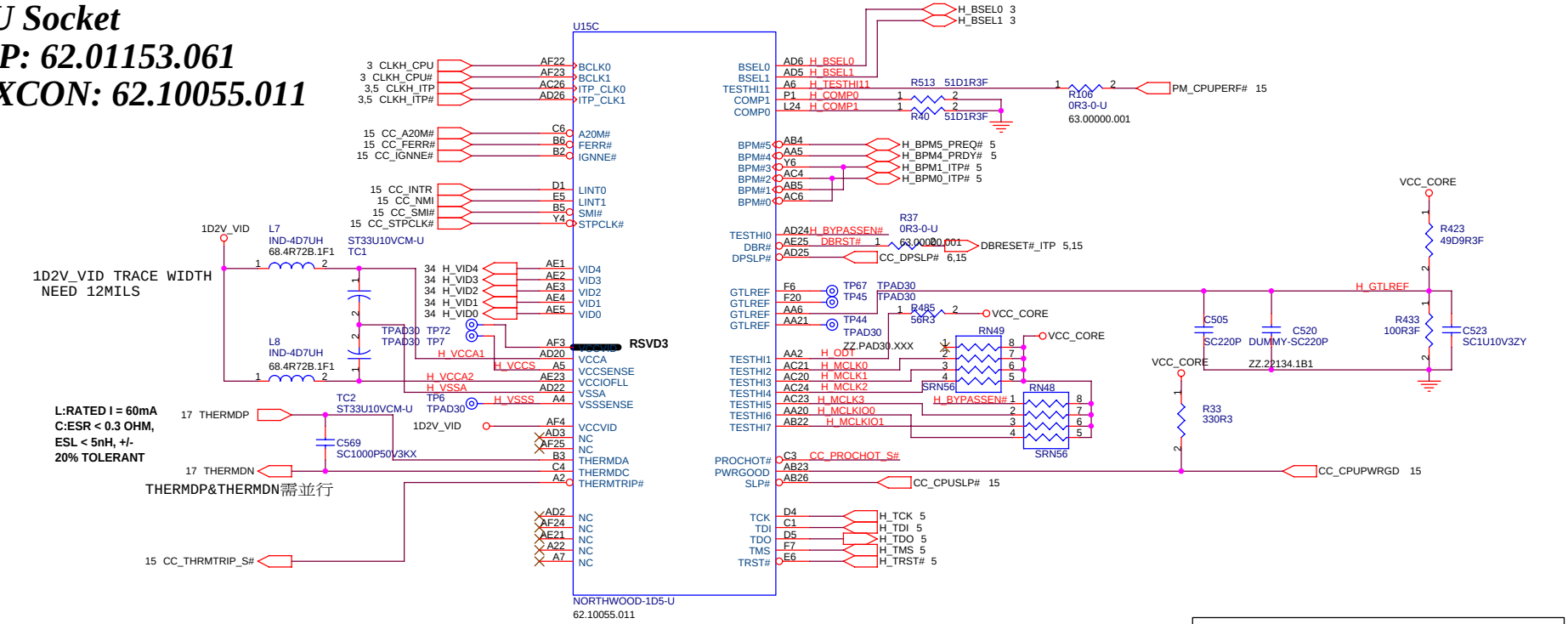


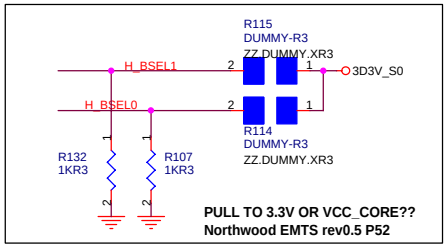


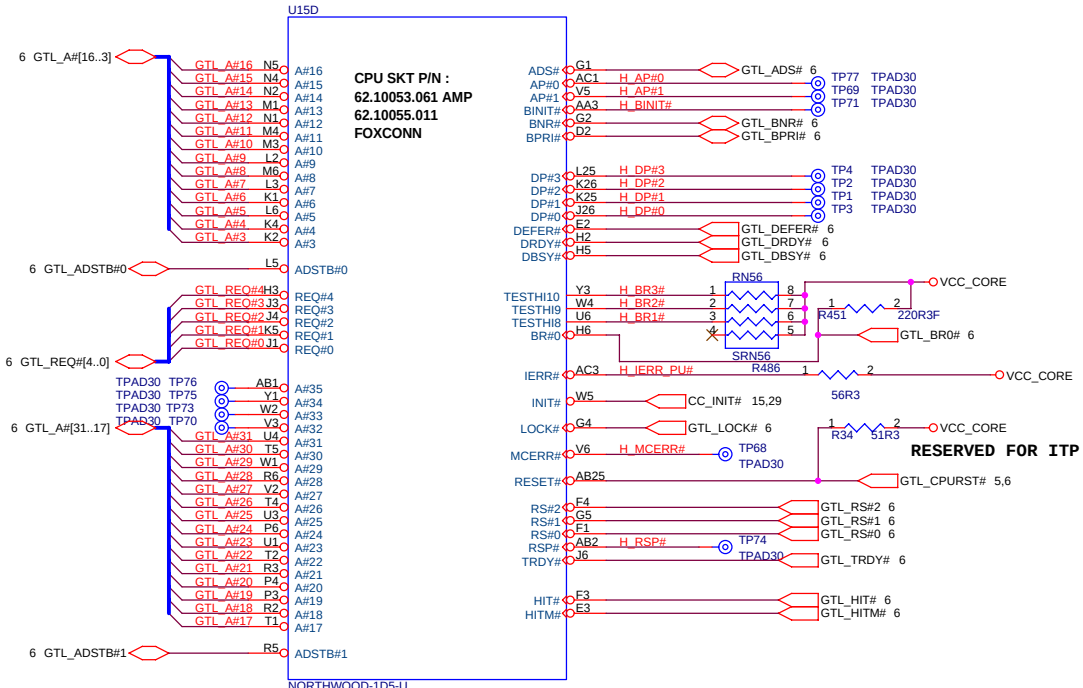


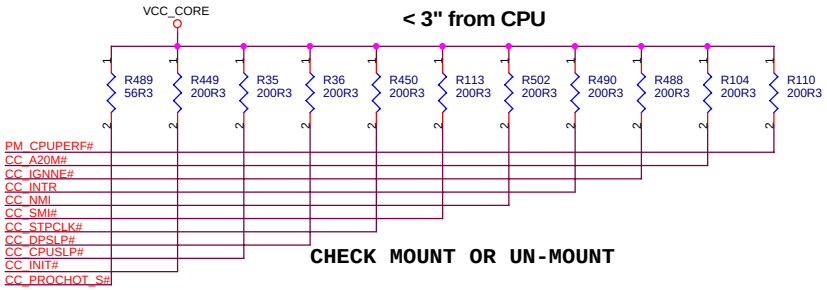


**Wistron Corporation**
21F, 88, Sec.1, Hsin Tai Wu Rd., Hsichih,
Taipei Hsien 221, Taiwan, R.O.C.

Title: *P4-M Northwood / CELERON CPU 1/2*

Size: A3 | Document Number: B2M | Rev: SC

Date: Thursday, January 16, 2003 | Sheet 4 of 43

WWW.AliSaler.Com

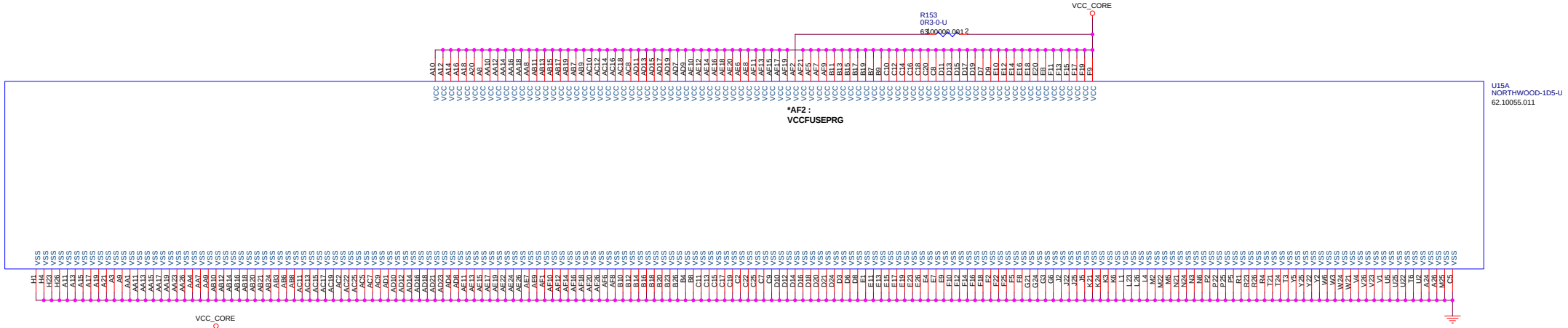


10U/X7R 1210 DECOUPLING CAPS
8X IN SOCKET CAVITY
10X IN CRB

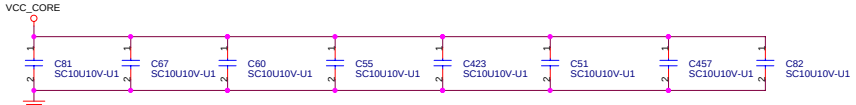


10U/X7R 1210 DECOUPLING CAPS
10X AROUND SOCKET
28X IN CRB

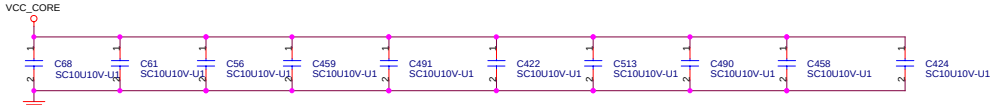


0.1U/X5R 0603 DECOUPLING CAPS
20X AROUND SOCKET
0.47U/X5R 0603 10X IN CRB

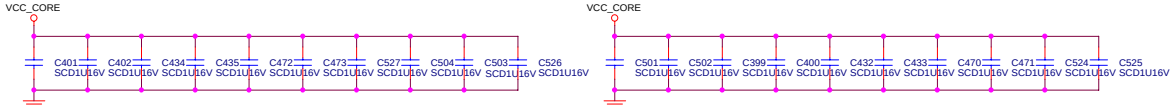


**CHANGE NOTES**
**CHANGE SC10U10V-U P/N:78.10613.2A1 (1210) (X7R)**
**P/N:78.10620.221 (1206) (X7R)**
**P/N:78.10610.521 (1206) (X5R)**

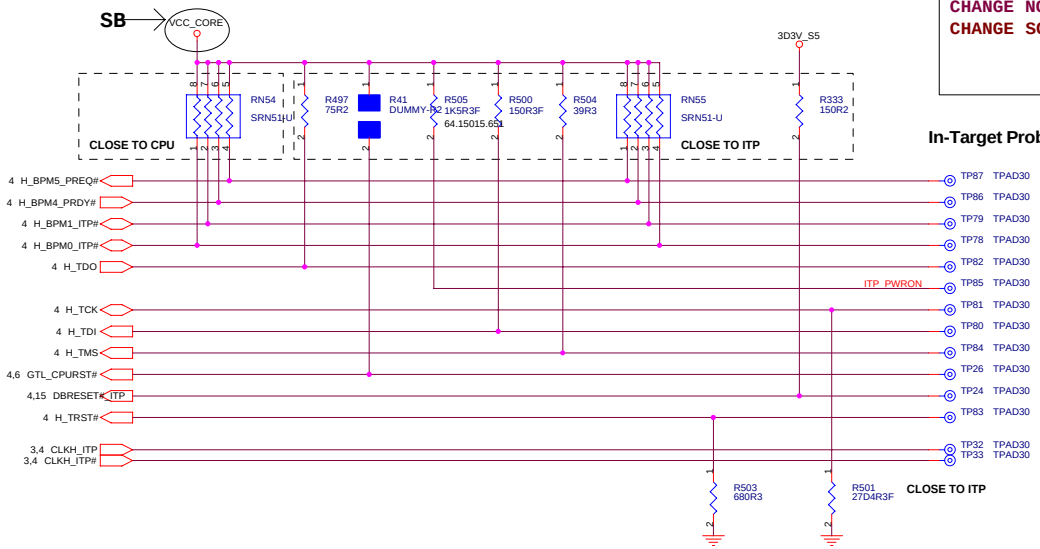


**In-Target Probe**

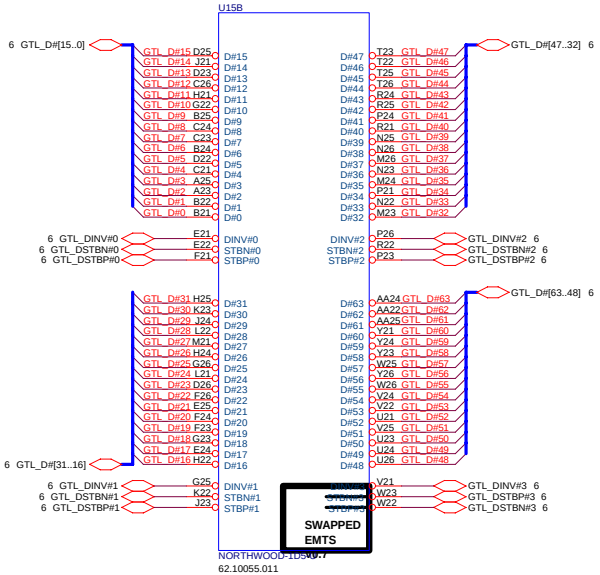



緯創資通 Wistron Corporation
21F, 88, Sec.1, Hsin Tai Wu Rd., Hsichih,
Taipei Hsien 221, Taiwan, R.O.C.


Title: *P4-M Northwood / CELERON CPU 2/2*

| Size | Document Number | Rev |
|---|---|---|
| Custom | B2M | SC |

Date: Thursday, January 16, 2003 Sheet 5 of 43

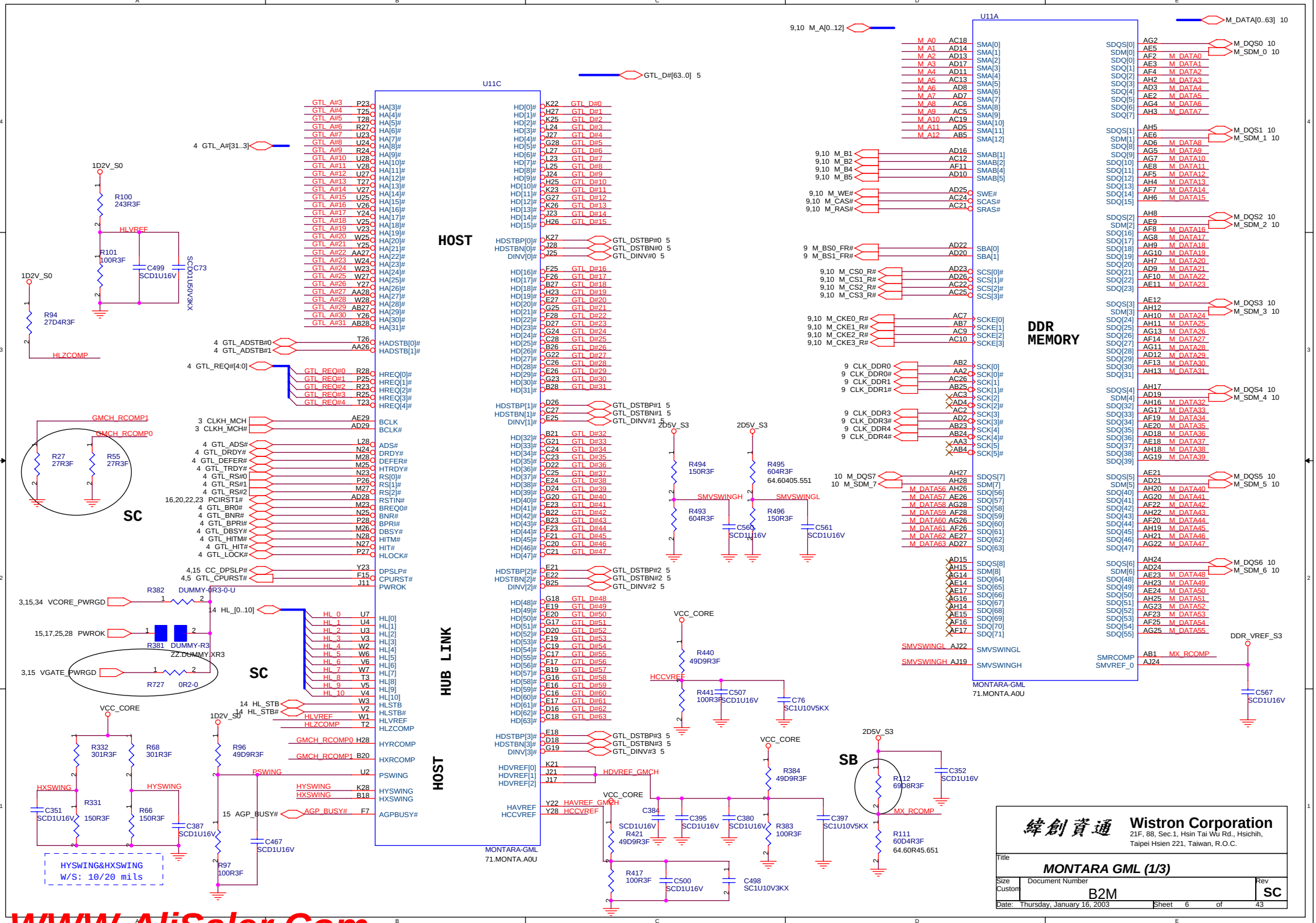


WWW.AliSaler.Com

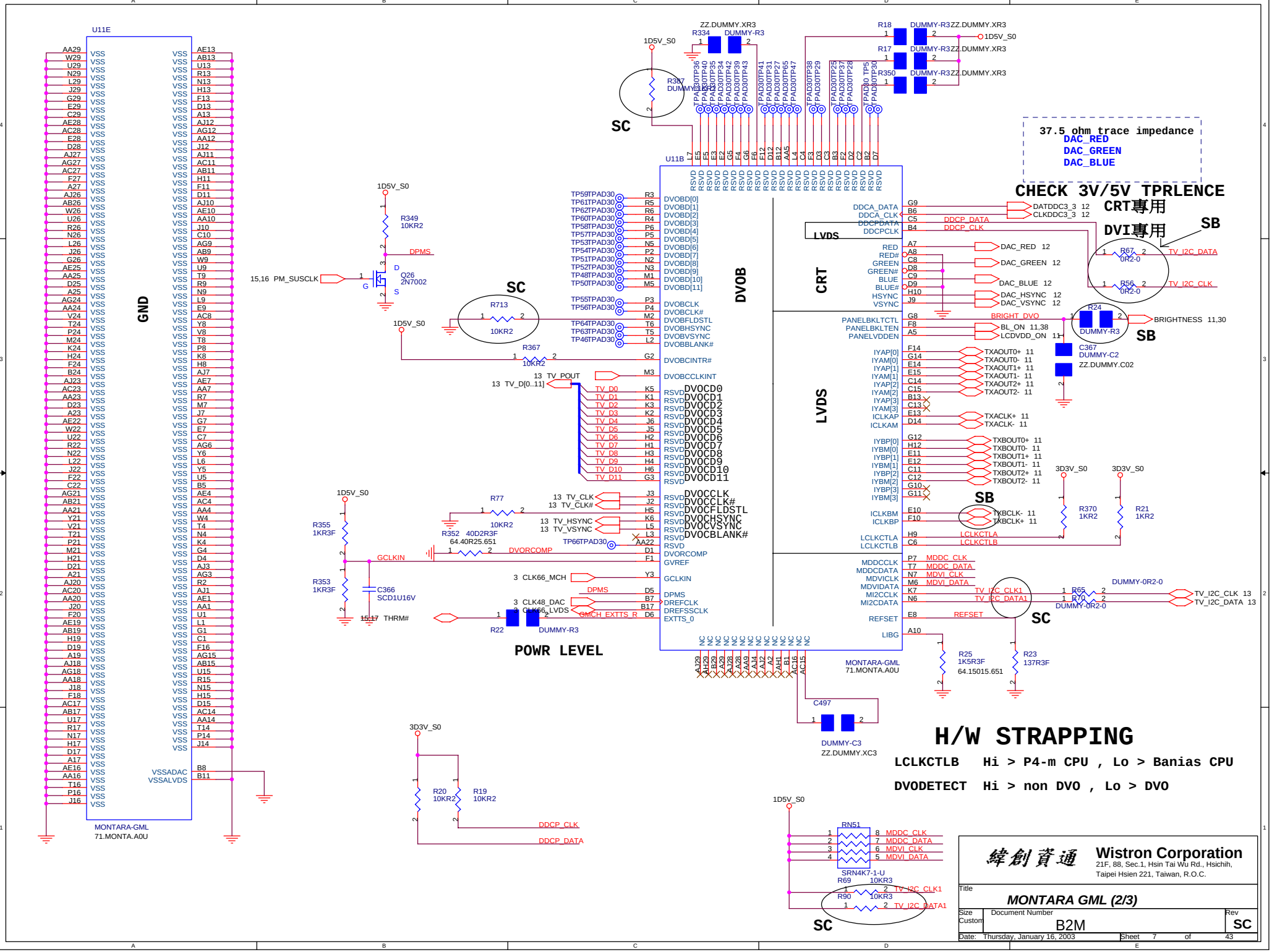
U11E
GND
MONTARA-GML
71.MONTA.A0U
U11B
DVOB
CRT
LVDS
37.5 ohm trace impedance
DAC_RED
DAC_GREEN
DAC_BLUE
CHECK 3V/5V TPRLENCE
CRT專用
DVI專用
SB
SC
POWR LEVEL
H/W STRAPPING
LCLKCTLB Hi > P4-m CPU , Lo > Banias CPU
DVODETECT Hi > non DVO , Lo > DVO
Wistron Corporation
21F, 88, Sec.1, Hsin Tai Wu Rd., Hsichih,
Taipei Hsien 221, Taiwan, R.O.C.
Title
MONTARA GML (2/3)
Size Custom
Document Number
B2M
Rev
SC
Date: Thursday, January 16, 2003
Sheet 7 of 43

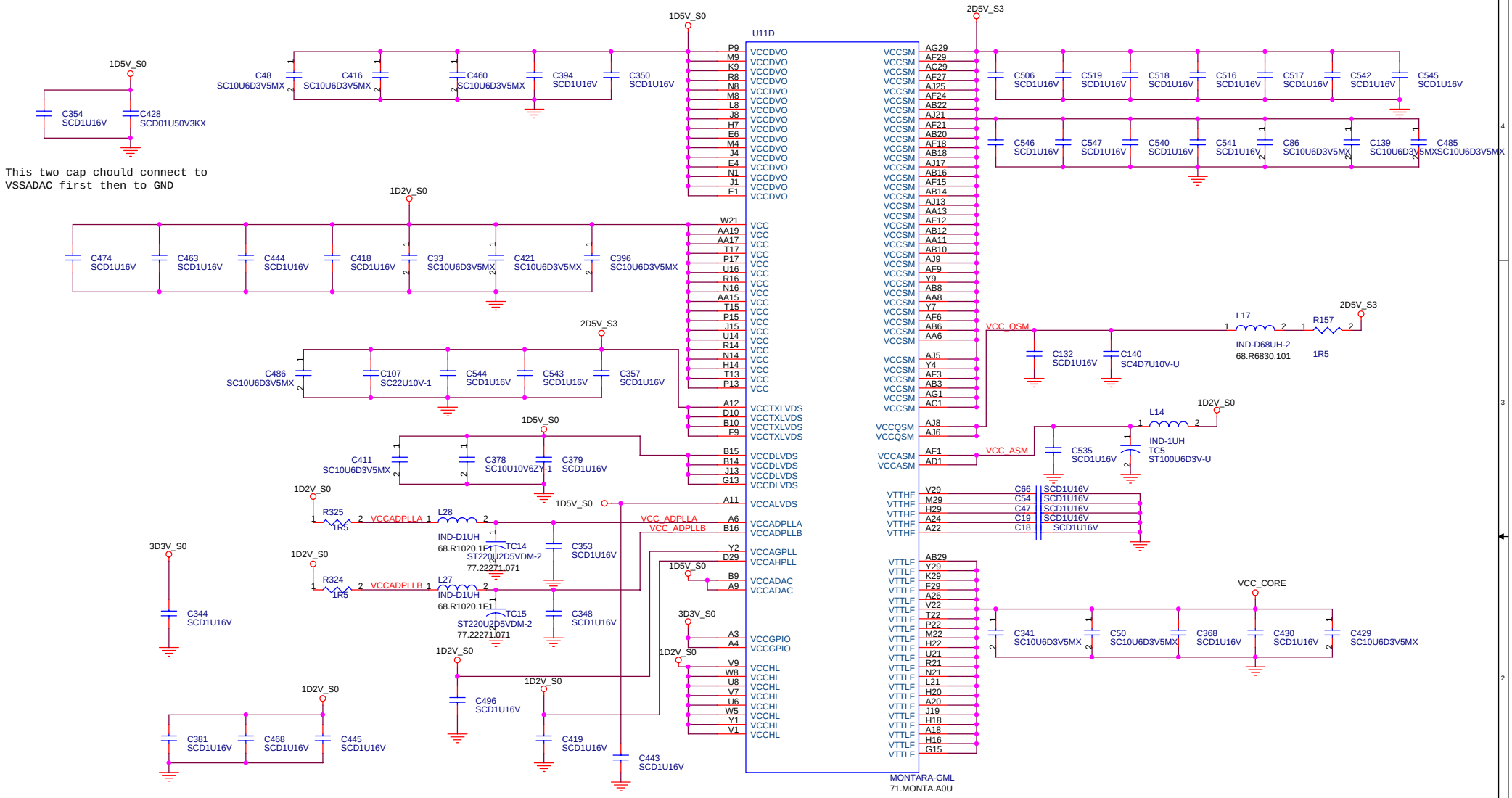


Wistron Corporation
21F, 88, Sec.1, Hsin Tai Wu Rd., Hsichih,
Taipei Hsien 221, Taiwan, R.O.C.

Title: MONTARA GML (3/3)

Size: A3 | Document Number: B2M | Rev: SC

Date: Thursday, January 16, 2003 | Sheet 8 of 43

WWW.AliSaler.Com

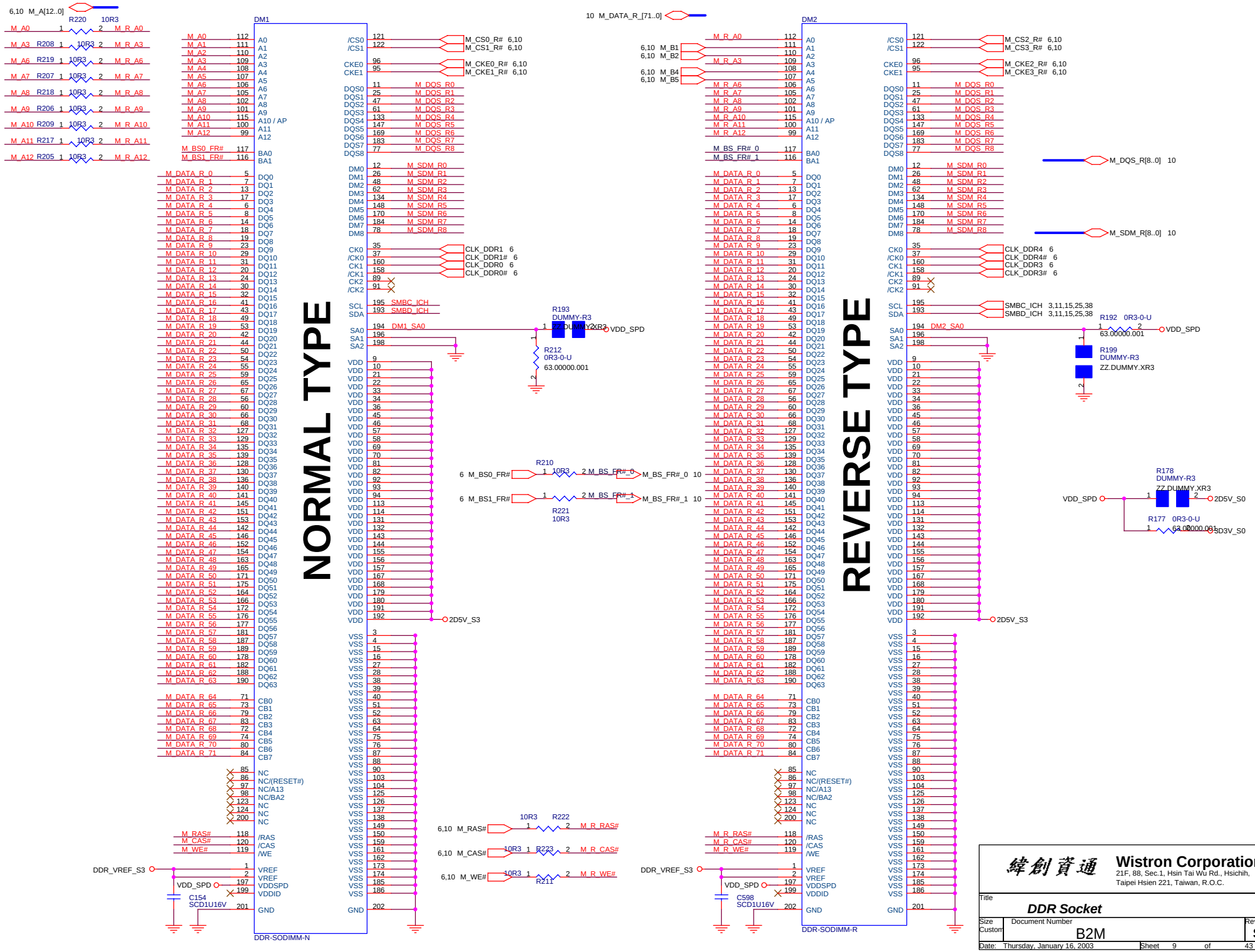



緯創資通
Wistron Corporation
21F, 88, Sec.1, Hsin Tai Wu Rd., Hsichih,
Taipei Hsien 221, Taiwan, R.O.C.

# SERIES DAMPING

RN38 — SRN10J-3

| | | | |
|---|---|---|---|
| M_SDM_6 | 1 | 16 | M_SDM_R6 |
| M_DATA54 | 2 | 15 | M_DATA_R_54 |
| M_DATA55 | 3 | 14 | M_DATA_R_55 |
| M_DATA60 | 4 | 13 | M_DATA_R_60 |
| M_DATA61 | 5 | 12 | M_DATA_R_61 |
| M_SDM_7 | 6 | 11 | M_SDM_R7 |
| M_DATA62 | 7 | 10 | M_DATA_R_62 |
| M_DATA63 | 8 | 9 | M_DATA_R_63 |

RN39 — SRN10J-3

| | | | |
|---|---|---|---|
| M_DATA4 | 1 | 16 | M_DATA_R_4 |
| M_DATA5 | 2 | 15 | M_DATA_R_5 |
| M_SDM_0 | 3 | 14 | M_SDM_R0 |
| M_DATA6 | 4 | 13 | M_DATA_R_6 |
| M_DATA7 | 5 | 12 | M_DATA_R_7 |
| M_DATA12 | 6 | 11 | M_DATA_R_12 |
| M_DATA13 | 7 | 10 | M_DATA_R_13 |
| M_SDM_1 | 8 | 9 | M_SDM_R1 |

RN21 — SRN10J-3

| | | | |
|---|---|---|---|
| M_DQS2 | 1 | 16 | M_DQS_R2 |
| M_DATA18 | 2 | 15 | M_DATA_R_18 |
| M_DATA19 | 3 | 14 | M_DATA_R_19 |
| M_DATA24 | 4 | 13 | M_DATA_R_24 |
| M_DATA25 | 5 | 12 | M_DATA_R_25 |
| M_DQS3 | 6 | 11 | M_DQS_R3 |
| M_DATA26 | 7 | 10 | M_DATA_R_26 |
| M_DATA27 | 8 | 9 | M_DATA_R_27 |

RN22 — SRN10J-3

| | | | |
|---|---|---|---|
| M_DATA33 | 1 | 16 | M_DATA_R_33 |
| M_DATA32 | 2 | 15 | M_DATA_R_32 |
| M_DQS4 | 3 | 14 | M_DQS_R4 |
| M_DATA34 | 4 | 13 | M_DATA_R_34 |
| M_DATA35 | 5 | 12 | M_DATA_R_35 |
| M_DATA40 | 6 | 11 | M_DATA_R_40 |
| M_DATA41 | 7 | 10 | M_DATA_R_41 |
| M_DQS5 | 8 | 9 | M_DQS_R5 |

RN19 — SRN10J-3

| | | | |
|---|---|---|---|
| M_DATA1 | 1 | 16 | M_DATA_R_1 |
| M_DATA0 | 2 | 15 | M_DATA_R_0 |
| M_DQS0 | 3 | 14 | M_DQS_R0 |
| M_DATA2 | 4 | 13 | M_DATA_R_2 |
| M_DATA3 | 5 | 12 | M_DATA_R_3 |
| M_DATA8 | 6 | 11 | M_DATA_R_8 |
| M_DATA9 | 7 | 10 | M_DATA_R_9 |
| M_DQS1 | 8 | 9 | M_DQS_R1 |

RN37 — SRN10J-3

| | | | |
|---|---|---|---|
| M_DATA36 | 1 | 16 | M_DATA_R_36 |
| M_DATA37 | 2 | 15 | M_DATA_R_37 |
| M_SDM_4 | 3 | 14 | M_SDM_R4 |
| M_DATA38 | 4 | 13 | M_DATA_R_38 |
| M_DATA39 | 5 | 12 | M_DATA_R_39 |
| M_DATA44 | 6 | 11 | M_DATA_R_44 |
| M_DATA45 | 7 | 10 | M_DATA_R_45 |
| M_SDM_5 | 8 | 9 | M_SDM_R5 |

RN24 — SRN10

| | | | |
|---|---|---|---|
| M_DATA42 | 1 | 8 | M_DATA_R_42 |
| M_DATA43 | 2 | 7 | M_DATA_R_43 |
| M_DATA49 | 3 | 6 | M_DATA_R_49 |
| M_DATA48 | 4 | 5 | M_DATA_R_48 |

RN35 — SRN10

| | | | |
|---|---|---|---|
| M_DATA15 | 1 | 8 | M_DATA_R_15 |
| M_DATA14 | 2 | 7 | M_DATA_R_14 |
| M_DATA20 | 3 | 6 | M_DATA_R_20 |
| M_DATA21 | 4 | 5 | M_DATA_R_21 |

RN20 — SRN10

| | | | |
|---|---|---|---|
| M_DATA11 | 1 | 8 | M_DATA_R_11 |
| M_DATA10 | 2 | 7 | M_DATA_R_10 |
| M_DATA16 | 3 | 6 | M_DATA_R_16 |
| M_DATA17 | 4 | 5 | M_DATA_R_17 |

RN34 — SRN10

| | | | |
|---|---|---|---|
| M_DATA46 | 1 | 8 | M_DATA_R_46 |
| M_DATA47 | 2 | 7 | M_DATA_R_47 |
| M_DATA52 | 3 | 6 | M_DATA_R_52 |
| M_DATA53 | 4 | 5 | M_DATA_R_53 |

RN23 — SRN10J-3

| | | | |
|---|---|---|---|
| M_DQS6 | 1 | 16 | M_DQS_R6 |
| M_DATA50 | 2 | 15 | M_DATA_R_50 |
| M_DATA51 | 3 | 14 | M_DATA_R_51 |
| M_DATA56 | 4 | 13 | M_DATA_R_56 |
| M_DATA57 | 5 | 12 | M_DATA_R_57 |
| M_DQS7 | 6 | 11 | M_DQS_R7 |
| M_DATA58 | 7 | 10 | M_DATA_R_58 |
| M_DATA59 | 8 | 9 | M_DATA_R_59 |

RN36 — SRN10J-3

| | | | |
|---|---|---|---|
| M_SDM_2 | 1 | 16 | M_SDM_R2 |
| M_DATA22 | 2 | 15 | M_DATA_R_22 |
| M_DATA23 | 3 | 14 | M_DATA_R_23 |
| M_DATA28 | 4 | 13 | M_DATA_R_28 |
| M_DATA29 | 5 | 12 | M_DATA_R_29 |
| M_SDM_3 | 6 | 11 | M_SDM_R3 |
| M_DATA30 | 7 | 10 | M_DATA_R_30 |
| M_DATA31 | 8 | 9 | M_DATA_R_31 |

**PLACE CAPS BETWEEN AND NEAR DDR SKTS**
**PLACE EACH 0.1UF CAP CLOSE TO POWER PIN**

2D5V_S3

C247 SCD1U16V, C241 SCD1U16V, C257 SCD1U16V, C623 SCD1U16V, C580 SCD1U16V, C244 SCD1U16V, C258 SCD1U16V, C245 SCD1U16V

C229 SCD1U16V, C224 SCD1U16V, C259 SCD1U16V, C242 SCD1U16V, C190 SCD1U16V, C581 SCD1U16V, C188 SCD1U16V, C192 SCD1U16V

C246 SCD1U16V, C137 SC10U10V-U1 (1, 2), C138 SC10U10V-U1 (1, 2)

WWW.AliSaler.Com

1D25V_S0

RN14 — C169 SCD1U16V, C170 SCD1U16V

| | | | |
|---|---|---|---|
| M_DATA_R_4 | 1 | 16 | |
| M_DATA_R_5 | 2 | 15 | |
| M_SDM_R0 | 3 | 14 | |
| M_DATA_R_7 | 4 | 13 | |
| M_DATA_R_6 | 5 | 12 | |
| M_DATA_R_13 | 6 | 11 | |
| M_DATA_R_12 | 7 | 10 | |
| M_SDM_R1 | 8 | 9 | |

SRN56F RN4 — C164 SCD1U16V, C166 SCD1U16V

| | | | |
|---|---|---|---|
| M_DATA_R_0 | 1 | 16 | |
| M_DATA_R_1 | 2 | 15 | |
| M_DQS_R0 | 3 | 14 | |
| M_DATA_R_2 | 4 | 13 | |
| M_DATA_R_3 | 5 | 12 | |
| M_DATA_R_8 | 6 | 11 | |
| M_DATA_R_9 | 7 | 10 | |
| M_DQS_R1 | 8 | 9 | |

SRN56F RN6 — C162 SCD1U16V, C213 SCD1U16V

| | | | |
|---|---|---|---|
| M_DQS_R2 | 1 | 16 | |
| M_DATA_R_18 | 2 | 15 | |
| M_DATA_R_19 | 3 | 14 | |
| M_DATA_R_24 | 4 | 13 | |
| M_DATA_R_25 | 5 | 12 | |
| M_DQS_R3 | 6 | 11 | |
| M_DATA_R_26 | 7 | 10 | |
| M_DATA_R_27 | 8 | 9 | |

SRN56F RN9 / SRN56-1 — C218 SCD1U16V, C225 SCD1U16V

| | | | |
|---|---|---|---|
| M_DATA_R_15 | 1 | 8 | |
| M_DATA_R_14 | 2 | 7 | |
| M_DATA_R_21 | 3 | 6 | |
| M_DATA_R_20 | 4 | 5 | |
| M_DATA_R_11 | 1 | 8 | |
| M_DATA_R_10 | 2 | 7 | |
| M_DATA_R_17 | 3 | 6 | |
| M_DATA_R_16 | 4 | 5 | |

RN3 / SRN56-1

RN11 — C194 SCD1U16V, C231 SCD1U16V

| | | | |
|---|---|---|---|
| M_SDM_R2 | 1 | 16 | |
| M_DATA_R_22 | 2 | 15 | |
| M_DATA_R_23 | 3 | 14 | |
| M_DATA_R_28 | 4 | 13 | |
| M_DATA_R_29 | 5 | 12 | |
| M_SDM_R3 | 6 | 11 | |
| M_DATA_R_30 | 7 | 10 | |
| M_DATA_R_31 | 8 | 9 | |

SRN56F RN10 / SRN56-1 — C226 SCD1U16V, C155 SCD1U16V

| | | | |
|---|---|---|---|
| M_DATA_R_46 | 1 | 8 | |
| M_DATA_R_47 | 2 | 7 | |
| M_DATA_R_52 | 3 | 6 | |
| M_DATA_R_53 | 4 | 5 | |
| M_DATA_R_43 | 1 | 8 | |
| M_DATA_R_42 | 2 | 7 | |
| M_DATA_R_48 | 3 | 6 | |
| M_DATA_R_49 | 4 | 5 | |

RN5 / SRN56-1

RN12 — C156 SCD1U16V, C157 SCD1U16V

| | | | |
|---|---|---|---|
| M_DATA_R_36 | 1 | 16 | |
| M_SDM_R4 | 2 | 15 | |
| M_DATA_R_37 | 3 | 14 | |
| M_DATA_R_39 | 4 | 13 | |
| M_DATA_R_38 | 5 | 12 | |
| M_DATA_R_44 | 6 | 11 | |
| M_DATA_R_45 | 7 | 10 | |
| M_SDM_R5 | 8 | 9 | |

SRN56F RN7 — C158 SCD1U16V, C153 SCD1U16V

| | | | |
|---|---|---|---|
| M_DATA_R_33 | 1 | 16 | |
| M_DATA_R_32 | 2 | 15 | |
| M_DQS_R4 | 3 | 14 | |
| M_DATA_R_34 | 4 | 13 | |
| M_DATA_R_35 | 5 | 12 | |
| M_DATA_R_40 | 6 | 11 | |
| M_DATA_R_41 | 7 | 10 | |
| M_DQS_R5 | 8 | 9 | |

SRN56F RN13 — C160 SCD1U16V, C161 SCD1U16V

| | | | |
|---|---|---|---|
| M_SDM_R6 | 1 | 16 | |
| M_DATA_R_54 | 2 | 15 | |
| M_DATA_R_55 | 3 | 14 | |
| M_DATA_R_61 | 4 | 13 | |
| M_DATA_R_60 | 5 | 12 | |
| M_SDM_R7 | 6 | 11 | |
| M_DATA_R_63 | 7 | 10 | |
| M_DATA_R_62 | 8 | 9 | |

SRN56F RN8 — C239 SCD1U16V, C230 SCD1U16V

| | | | |
|---|---|---|---|
| M_DQS_R6 | 1 | 16 | |
| M_DATA_R_50 | 2 | 15 | |
| M_DATA_R_51 | 3 | 14 | |
| M_DATA_R_57 | 4 | 13 | |
| M_DATA_R_56 | 5 | 12 | |
| M_DQS_R7 | 6 | 11 | |
| M_DATA_R_58 | 7 | 10 | |
| M_DATA_R_59 | 8 | 9 | |

SRN56F

# PARALLEL TERMINATION

**PULL HIGH STUBS < 0.8", PLACE RPs CLOSE TO DM2**
**NO EQUAL LENGTH LIMITATION**

M_DATA[63..0] 6
M_DATA_R_[63..0] 9
M_DQS[7..0] 6
M_DQS_R[7..0] 9
M_SDM_[7..0] 6
M_SDM_R[7..0] 9
M_A[12..0] 6,9

## CPC Address

1D25V_S0

RN18 — SRN56 — C165 SCD1U16V

| | | | |
|---|---|---|---|
| M_A1 | 1 | 8 | |
| M_A10 | 2 | 7 | |
| 6,9 M_WE# | 3 | 6 | |
| 6,9 M_CS0_R# | 4 | 5 | |

RN15 — SRN56 — C193 SCD1U16V

| | | | |
|---|---|---|---|
| 6,9 M_CS3_R# | 1 | 8 | |
| 9 M_BS_FR#_1 | 2 | 7 | |
| 6,9 M_B2 | 3 | 6 | |
| 6,9 M_B4 | 4 | 5 | |

66.56036.080

## Address / Command

1D25V_S0

RN29 — SRN56 — C227 SCD1U16V

| | | | |
|---|---|---|---|
| M_A8 | 1 | 8 | |
| M_A6 | 2 | 7 | |
| M_A4 | 3 | 6 | |
| M_A2 | 4 | 5 | |

RN30 — SRN56 — C163 SCD1U16V

| | | | |
|---|---|---|---|
| M_A0 | 1 | 8 | |
| 6,9 M_RAS# | 2 | 7 | |
| 6,9 M_CAS# | 3 | 6 | |
| 6,9 M_CS1_R# | 4 | 5 | |

RN17 — SRN56 — C221 SCD1U16V

| | | | |
|---|---|---|---|
| M_A9 | 1 | 8 | |
| M_A7 | 2 | 7 | |
| M_A5 | 3 | 6 | |
| M_A3 | 4 | 5 | |

RN2 — SRN56 — C219 SCD1U16V

| | | | |
|---|---|---|---|
| 6,9 M_B5 | 1 | 8 | |
| 6,9 M_B1 | 2 | 7 | |
| 9 M_BS_FR#_0 | 3 | 6 | |
| 6,9 M_CS2_R# | 4 | 5 | |

66.56036.080

## Control

1D25V_S0

6,9 M_CKE2_R# — R198 56R2J-1 — C159 SCD1U16V
6,9 M_CKE3_R# — R176 56R2J-1

RN16 — SRN560J — C223 SCD1U16V

| | | | |
|---|---|---|---|
| 6,9 M_CKE1_R# | 3 | 2 | |
| M_A12 | 4 | 1 | |

RN28 — SRN560J — C220 SCD1U16V

| | | | |
|---|---|---|---|
| 6,9 M_CKE0_R# | 3 | 2 | |
| M_A11 | 4 | 1 | |

緯創資通 **Wistron Corporation**
21F, 88, Sec.1, Hsin Tai Wu Rd., Hsichih,
Taipei Hsien 221, Taiwan, R.O.C.

Title: ***DDR Serial/Terminator Resistor***

| Size | Document Number | Rev |
|---|---|---|
| A3 | B2M | SC |

Date: Thursday, January 16, 2003 Sheet 10 of 43

# LCD / INVERTER INTERFACE

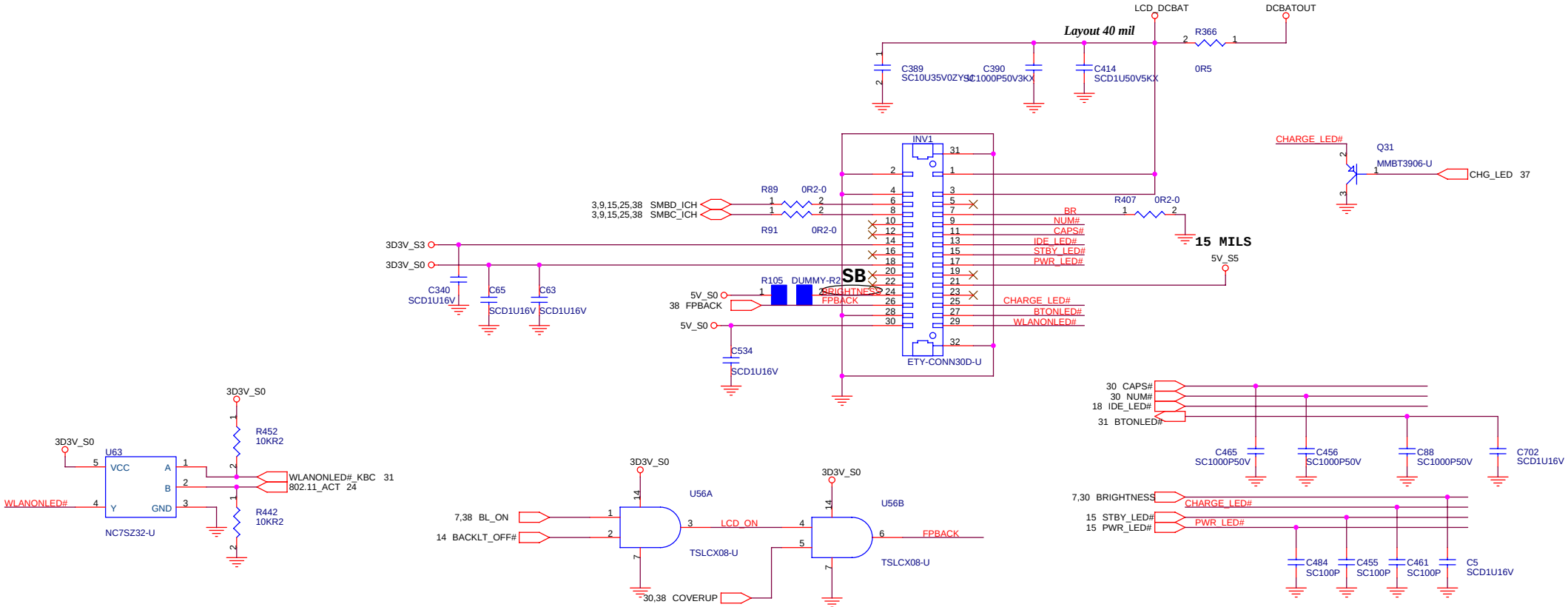


# LCD CONN

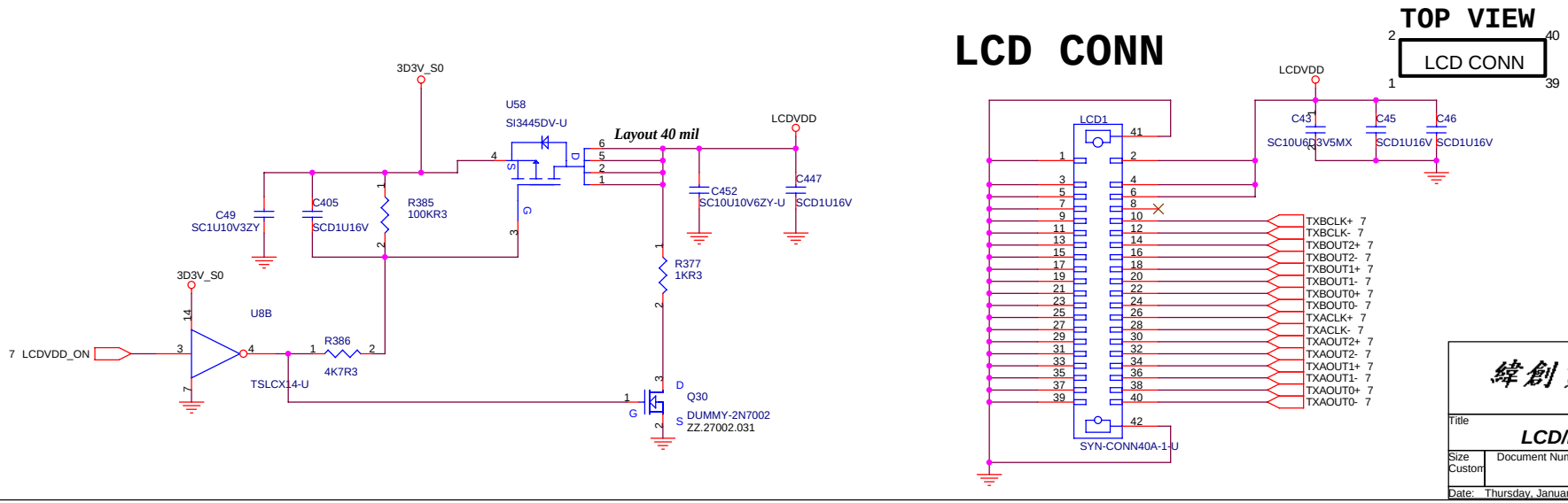


| | | |
|---|---|---|
| 緯創資通 | **Wistron Corporation**<br>21F, 88, Sec.1, Hsin Tai Wu Rd., Hsichih,<br>Taipei Hsien 221, Taiwan, R.O.C. | |
| Title | ***LCD/Inverter Connector*** | |
| Size<br>Custom | Document Number<br>B2M | Rev<br>**SC** |
| Date: Thursday, January 16, 2003 | Sheet 11 of 43 | |

# CRT I/F & CONNECTOR

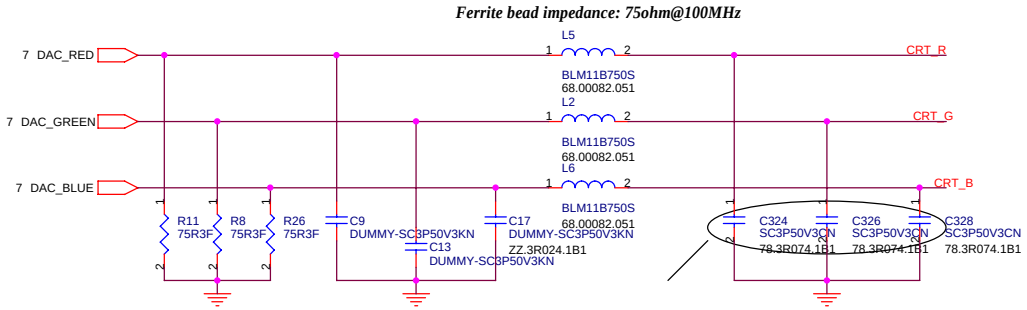


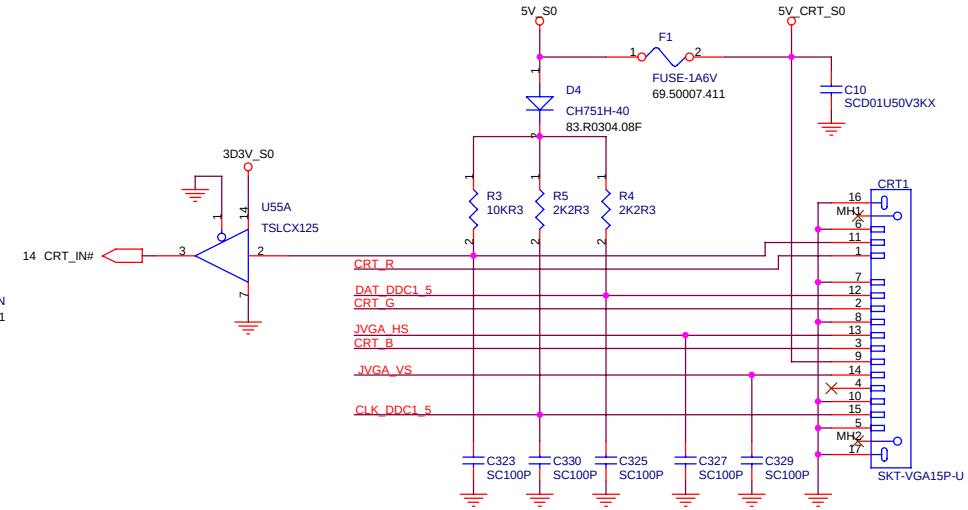


*Layout Note:*
** Must be a ground return path between this ground and the ground on the VGA connector.*
** 37.4_1% resistors must be placed at the same place as the RGB 75 Ohm pull-down resistors.*

*Pi-filter & 75 Ohm pull-down resistors should be as close as to CRT CONN. RGB will hit 75 Ohm first, pi-filter, then CRT CONN.*

**RDDP 1.0**

*Hsync & Vsync level shift*

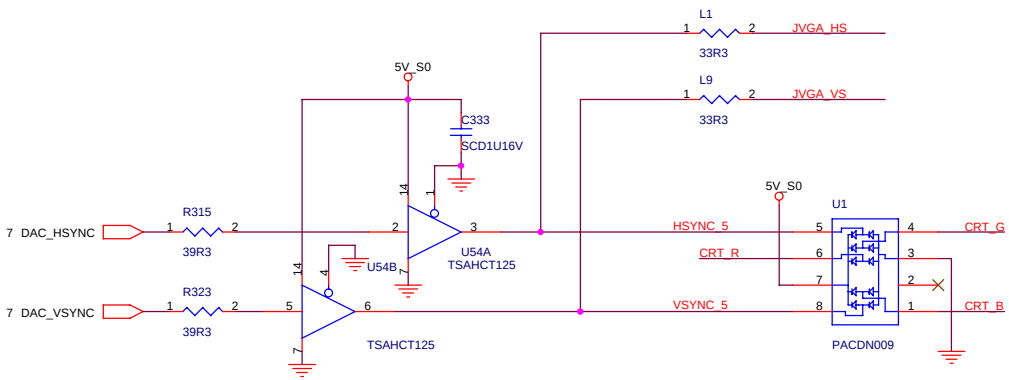


*DDC_CLK & DATA level shift*

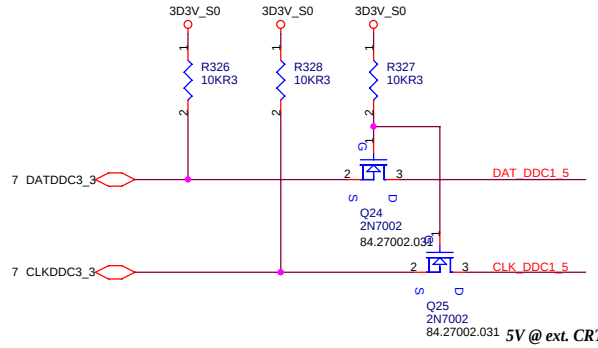



緯創資通 Wistron Corporation
21F, 88, Sec.1, Hsin Tai Wu Rd., Hsichih,
Taipei Hsien 221, Taiwan, R.O.C.


| Title | CRT Connector | |
|---|---|---|
| Size A3 | Document Number B2M | Rev SC |
| Date: Thursday, January 16, 2003 | Sheet 12 of 43 | |

WWW.AliSaler.Com

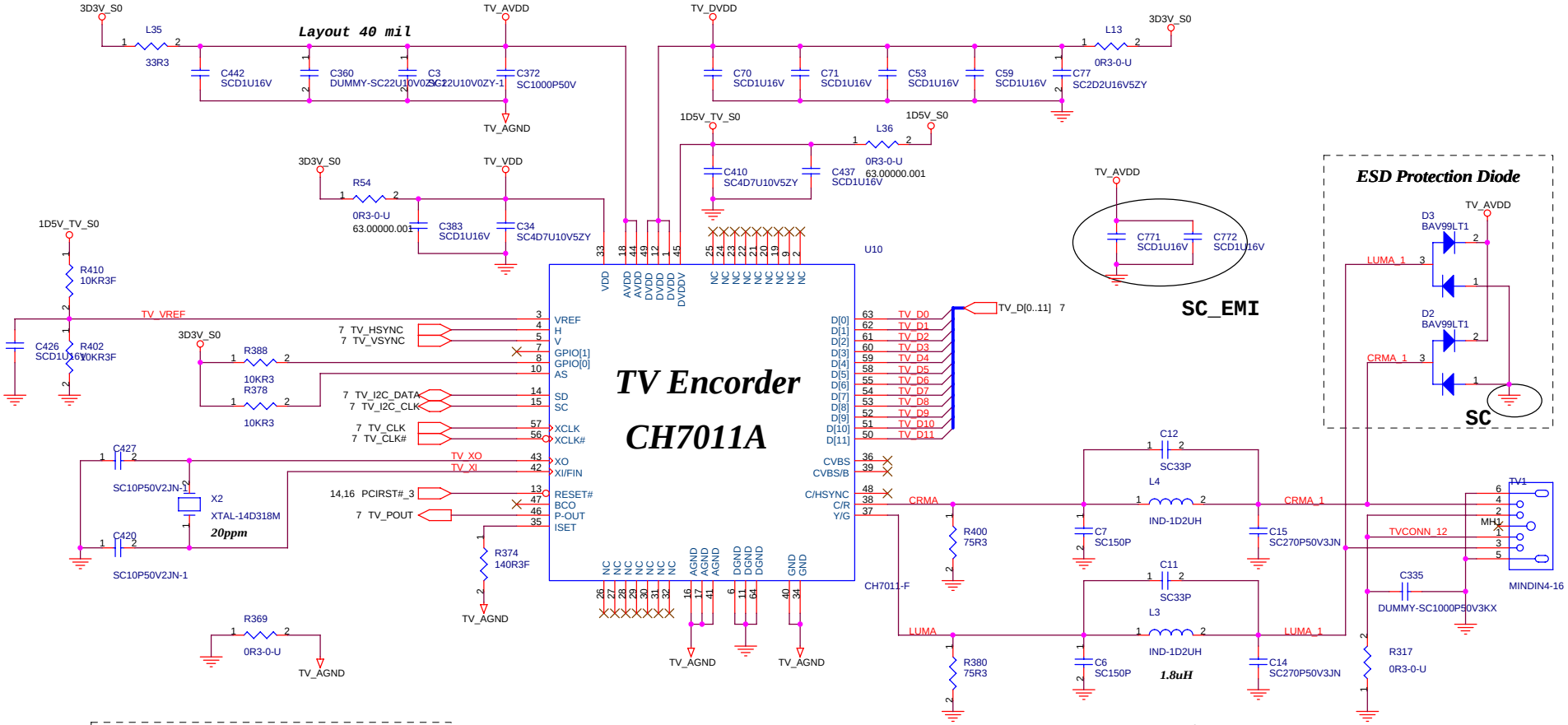


| CH7011 Addresss: | | |
|---|---|---|
| 0X75 | AS pull-up | (int. pull-up) |
| 0X76 | AS pull-down | |

| Power up default: | | |
|---|---|---|
| NTSC | GPIO0 pull-up | (int. pull-up) |
| PAL | GPIO0 pull-down | |

緯創資通

**Wistron Corporation**
21F, 88, Sec.1, Hsin Tai Wu Rd., Hsichih,
Taipei Hsien 221, Taiwan, R.O.C.

Title: TV Encorder - Chrontel 7011A

Size: A3 | Document Number: B2M | Rev: SC

Date: Thursday, January 16, 2003 | Sheet 13 of 43

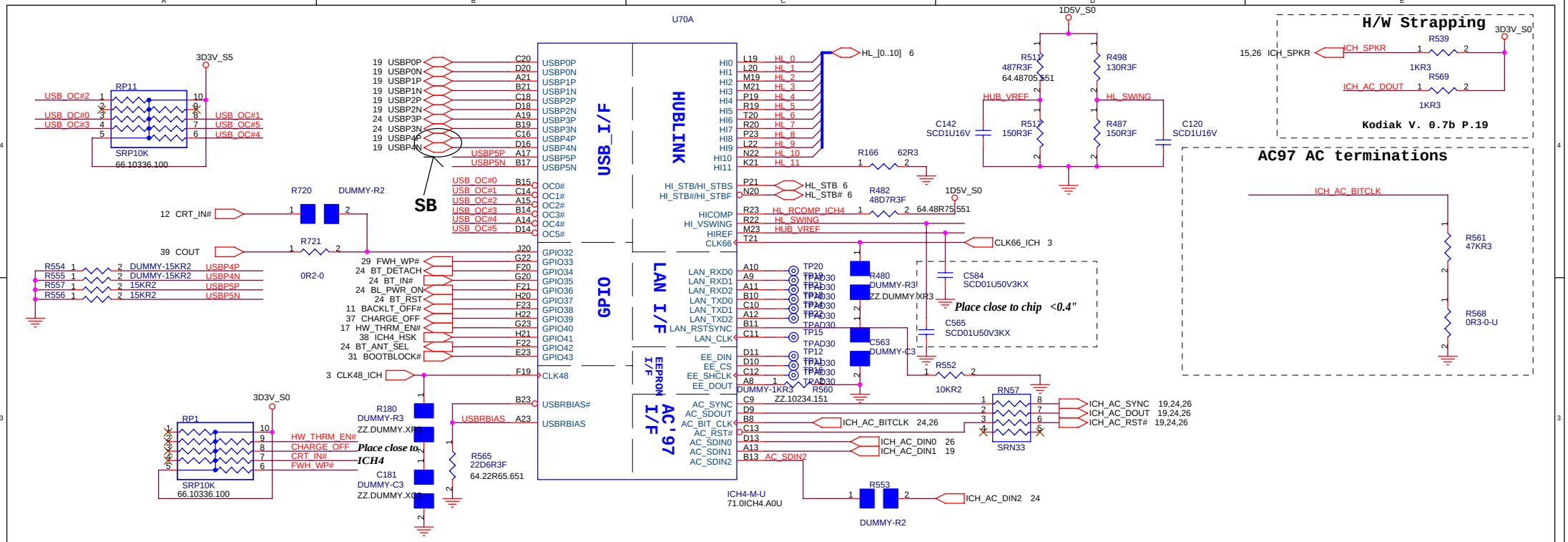


## ICH4 Integrated Pull-up and Pull-down Resistors

ICH4 EDS 10429 4.2

| | |
|---|---|
| EE_DIN, EE_DOUT, PME#, PWRBTN#<br>GNT[B:A]#/GNT[5]#/GPIO[17:16],<br>LAD[3:0]#/FWH[3:0]#, LDRQ[1:0], | ICH4 internal 20K pull-ups |
| LAN_RXD[2:0] | ICH4 internal 10K pull-ups |
| AC_BITCLK, AC_RST#, AC_SDIN[2:0],<br>AC_SDOUT, AC_SYNC, DPRSLPVR, SPKR | ICH4 internal 20K pull-downs |
| USB[5:0][P,N] | ICH4 internal 15K pull-downs |
| PDD[7]/SDD[7], PDDREQ / SDDREQ | ICH4 internal 11.5K pull-downs |
| LANCLK | ICH4 internal 100K pull-downs |

## ICH4 IDE Integrated Series Termination Resistors

| | |
|---|---|
| PDD[15:0],SDD[15:0],PDIOW#,SDIOW#,<br>PDIOR#,PDIOW#,PDREQ,SDREQ,<br>PDDACK#, SDDACK#, PIORDY,SIORDY,<br>PDA[2:0],SDA[2:0], PDCS1#,SDCS1#,<br>PDCS3#,SDCS3#,IRQ14,IRQ15, | approximately 33 ohm |

## PCI

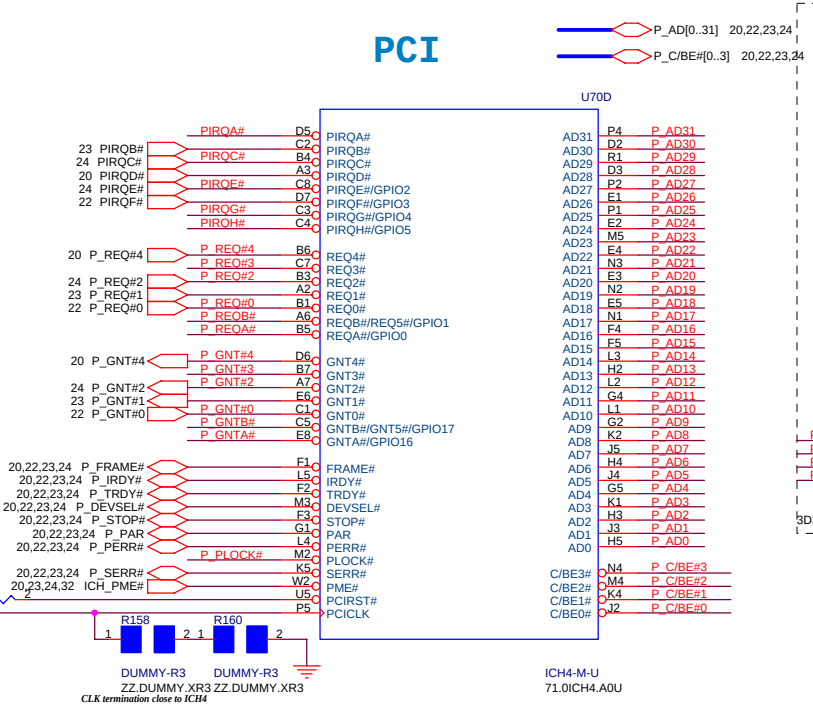


## Interrupt I/F Pullups

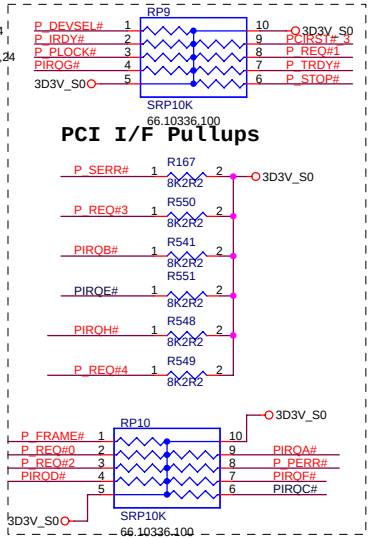


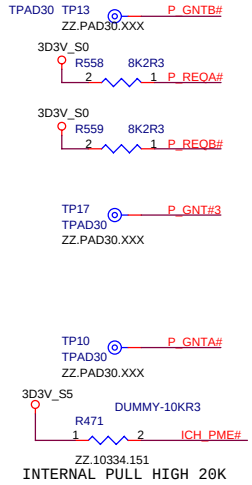



緯創資通 Wistron Corporation
21F, 88, Sec.1, Hsin Tai Wu Rd., Hsichih,
Taipei Hsien 221, Taiwan, R.O.C.


Title: ICH4M(1/3)

Size: Custom | Document Number: B2M | Rev: SC

Date: Thursday, January 16, 2003 | Sheet 14 of 43

WWW.AliSaler.Com

# IDE1 & IDE2

## RTC Circuitry

T=22ms

RSMRST# is RTC power plane

Change small 0805 type capacitor vaule

SB

LAYOUT: MAKE PAD ACCESSABLE

RTCRST# delay 10~20ms

INTEL DON'T PH AGPBUSY#

FOR SMBus2.0

Q94 & Q95 connect SMLINK and SMBUS in S) for SMBus 2.0 compliance

SC

SC

ICH4-M-U 71.0ICH4.A0U

U70E

U70B

U8C TSLCX14-U

U8D TSLCX14-U


Wistron Corporation
21F, 88, Sec.1, Hsin Tai Wu Rd., Hsichih, Taipei Hsien 221, Taiwan, R.O.C.


Title: ICH4M(2/3)

Size: A3 | Document Number: B2M | Rev: SC

Date: Thursday, January 16, 2003 | Sheet 15 of 43

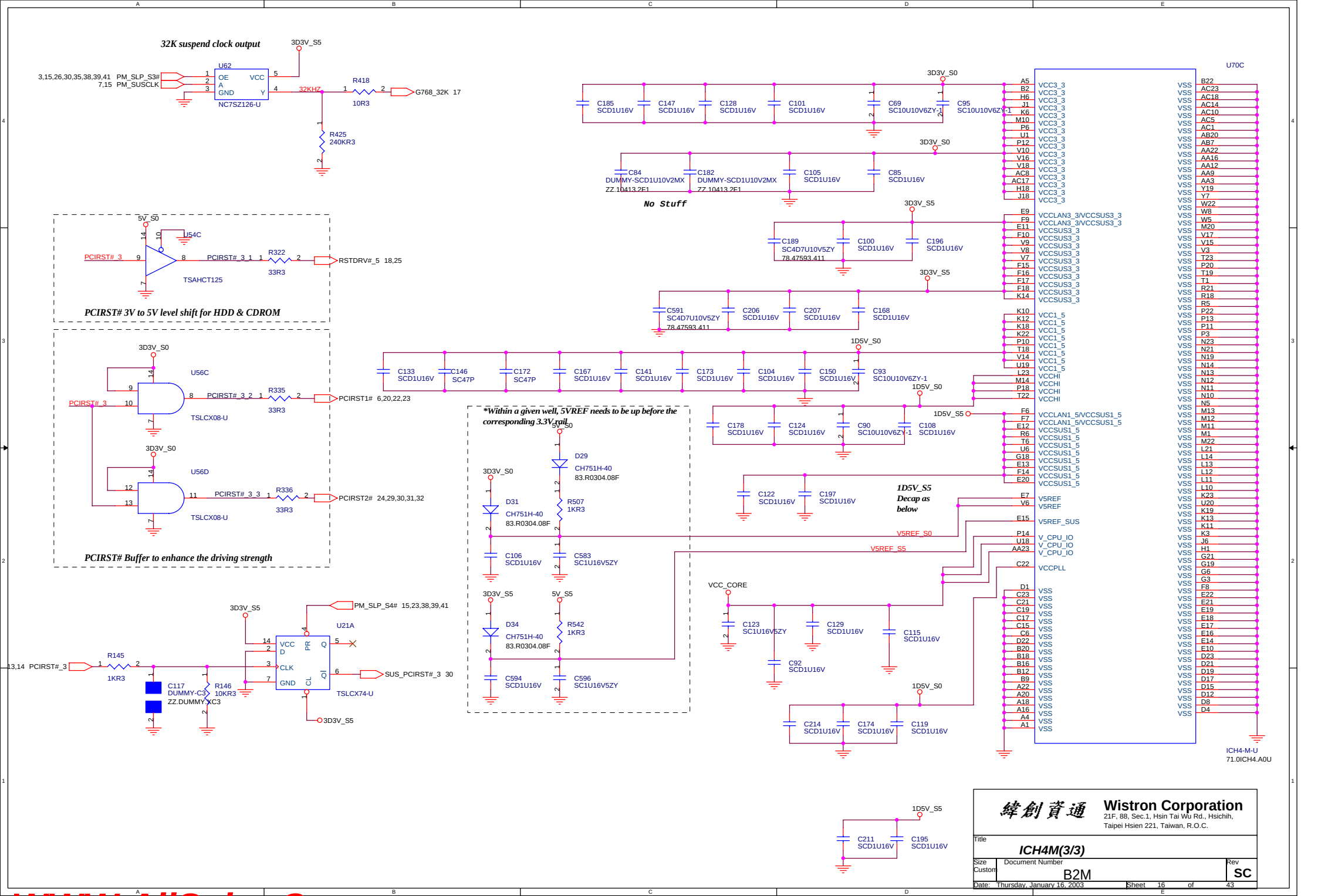


WWW.AliSaler.Com

# G768D thermal sensor & Fan controller

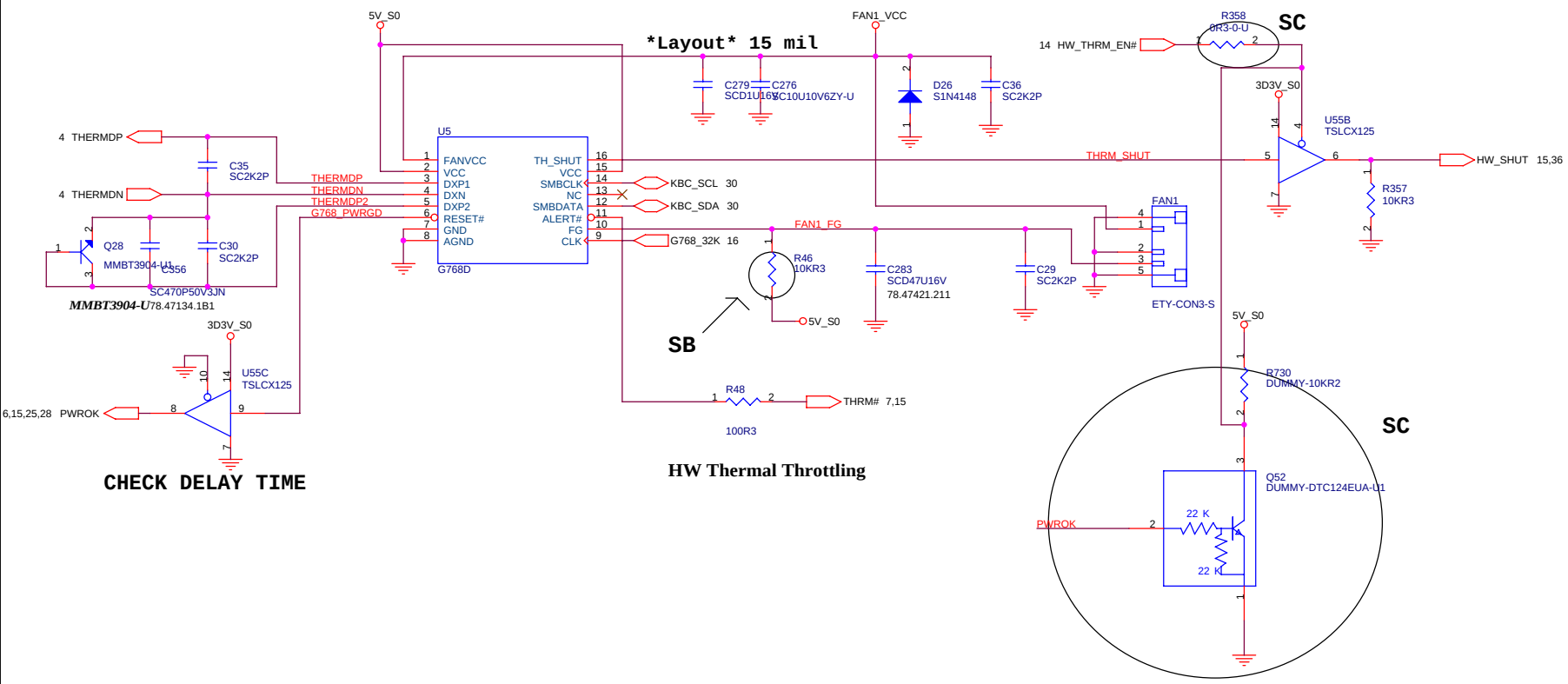


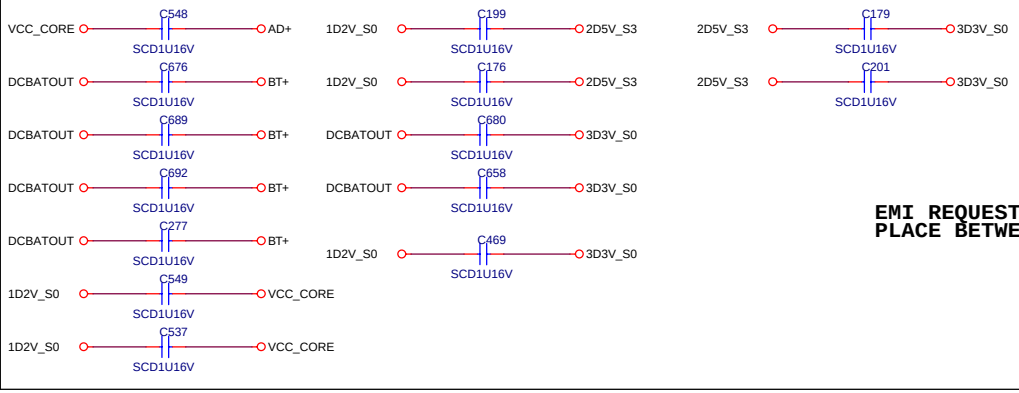


EMI REQUEST,
PLACE BETWEEN DIFFERENT POWER PLANE.


緯創資通 Wistron Corporation
21F, 88, Sec.1, Hsin Tai Wu Rd., Hsichih,
Taipei Hsien 221, Taiwan, R.O.C.


| Title | | |
|---|---|---|
| Thermal/Fan Controllor | | |
| Size: Custom | Document Number: B2M | Rev: SC |
| Date: Thursday, January 16, 2003 | Sheet 17 of 43 | |

# CD-ROM CONN

# HDD Connector

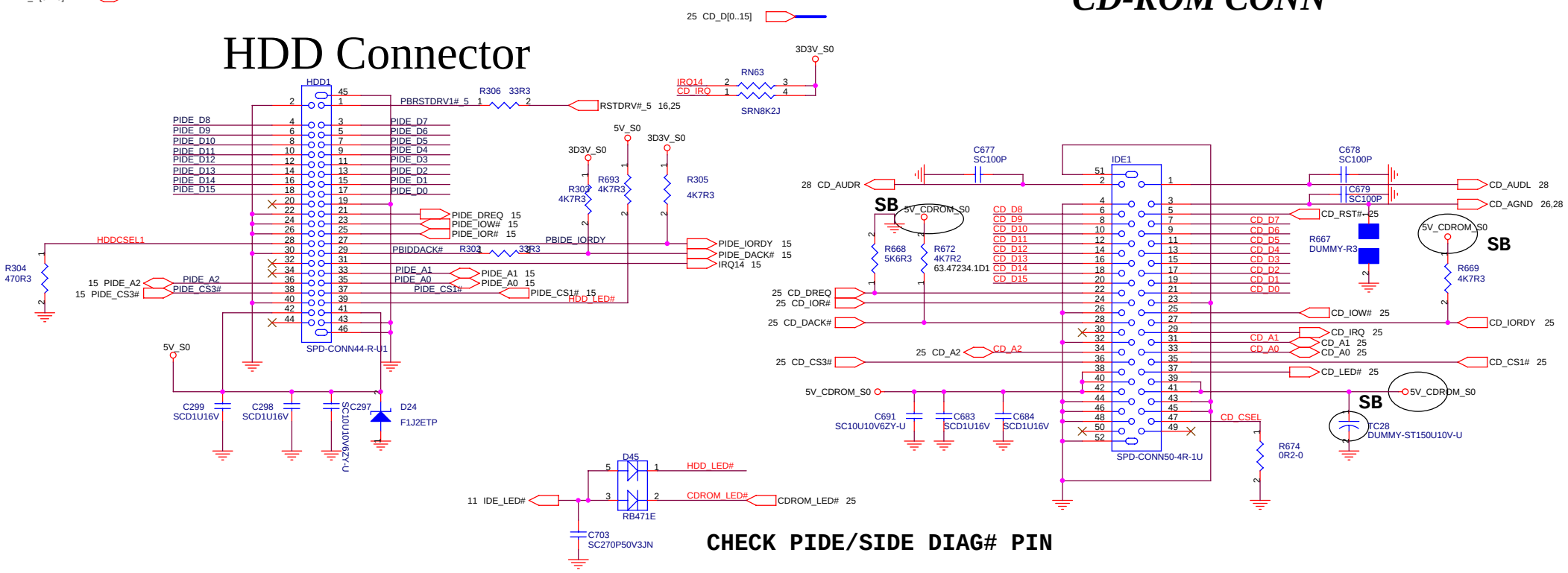


**CHECK PIDE/SIDE DIAG# PIN**


緯創資通 Wistron Corporation
21F, 88, Sec.1, Hsin Tai Wu Rd., Hsichih,
Taipei Hsien 221, Taiwan, R.O.C.


Title: **HDD and CDROM and FDD CONN**

| Size | Document Number | Rev |
|---|---|---|
| A3 | B2M | SC |

Date: Thursday, January 16, 2003 Sheet 18 of 43

WWW.AliSaler.Com

# USB PORT

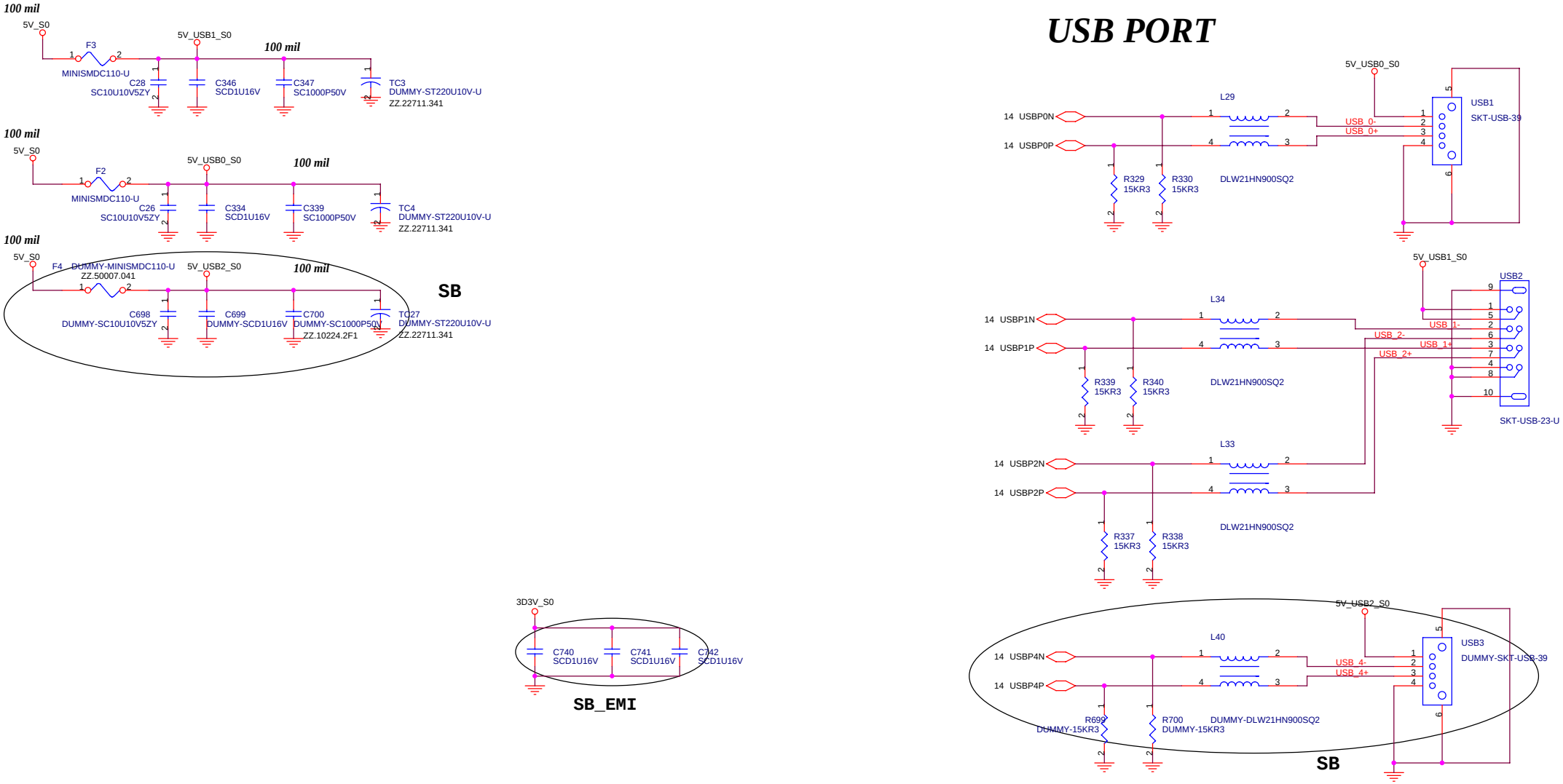


# MDC Connector

| | |
|---|---|
| 緯創資通 | **Wistron Corporation**<br>21F, 88, Sec.1, Hsin Tai Wu Rd., Hsichih,<br>Taipei Hsien 221, Taiwan, R.O.C. |
| Title | ***USB and MDC I/F and LAN*** |
| Size A3 | Document Number B2M | Rev **SC** |
| Date: Thursday, January 16, 2003 | Sheet 19 of 43 |

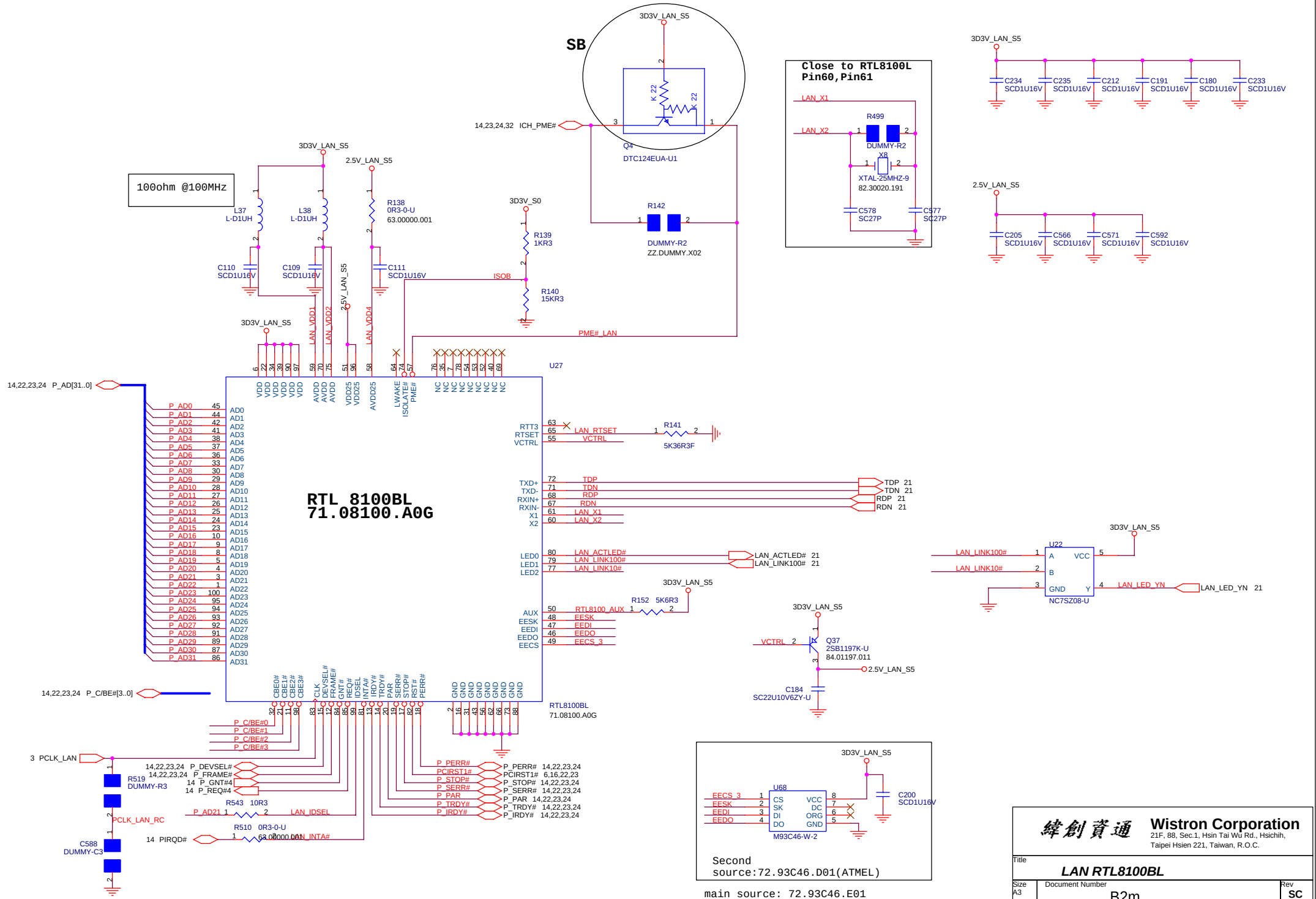


WWW.AliSaler.Com

# LAN Connector

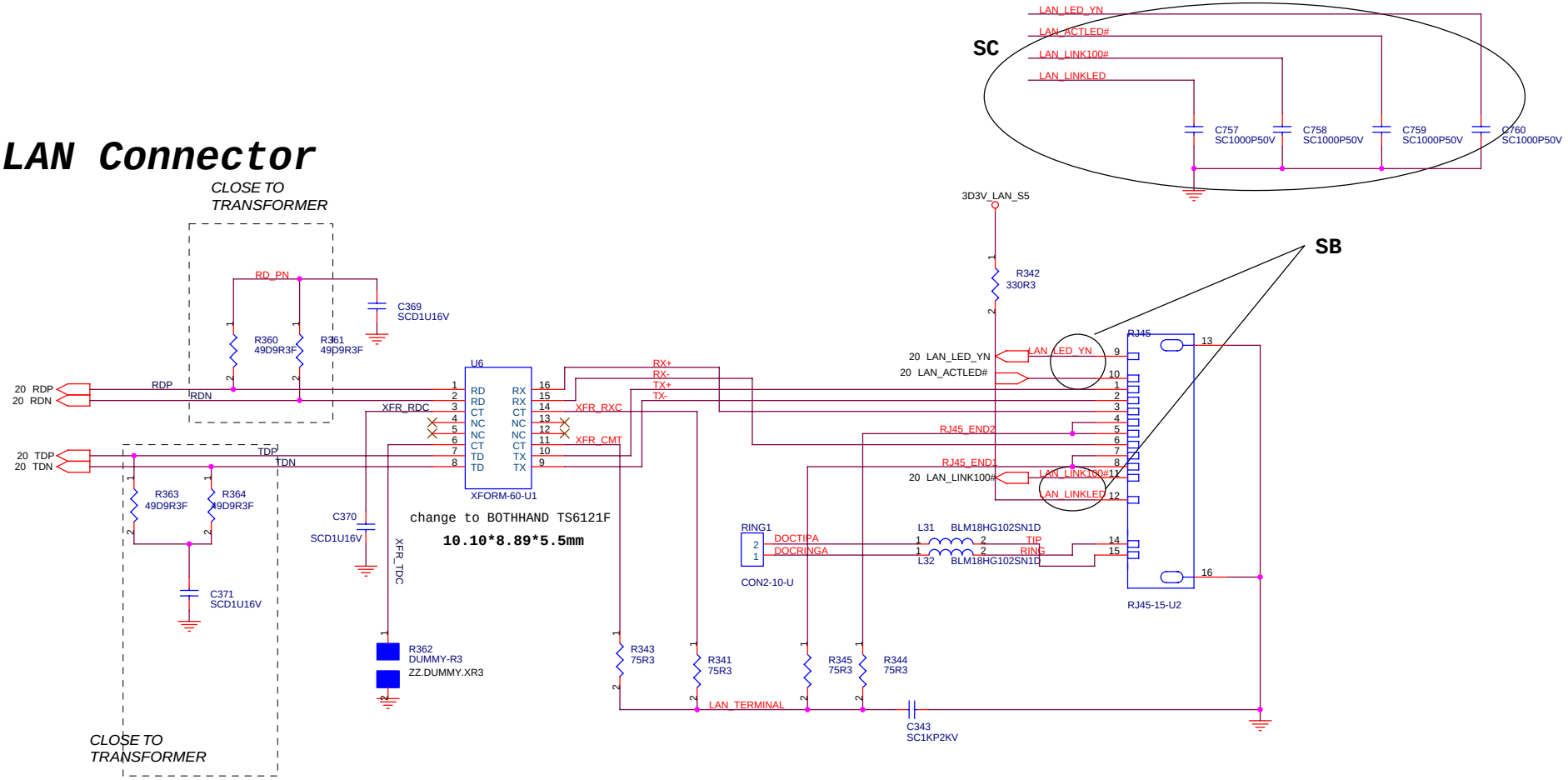


CLOSE TO TRANSFORMER

1.route on bottom as differential pairs.
2.Tx+/Tx- are pairs. Rx+/Rx- are pairs.
3.No vias, No 90 degree bends.
4.pairs must be equal lengths.
5.6mil trace width,12mil separation.
6.36mil between pairs and any other trace.
7.Must not cross ground moat,except RJ-45 moat.

DOC_TIP,DOC_RING,TIP,RING:
W/S : 10/100 @ Surface layers
10/20 @ Inner layers

**Green LED:Speed 100: ON/Speed 10:OFF**
**Yellow LED:Link : ON**


緯創資通 **Wistron Corporation**
21F, 88, Sec.1, Hsin Tai Wu Rd., Hsichih,
Taipei Hsien 221, Taiwan, R.O.C.


| Title | | |
|---|---|---|
| | ***LAN Connector*** | |
| Size A3 | Document Number B2M | Rev **SC** |
| Date: Thursday, January 16, 2003 | Sheet 21 of 43 | |

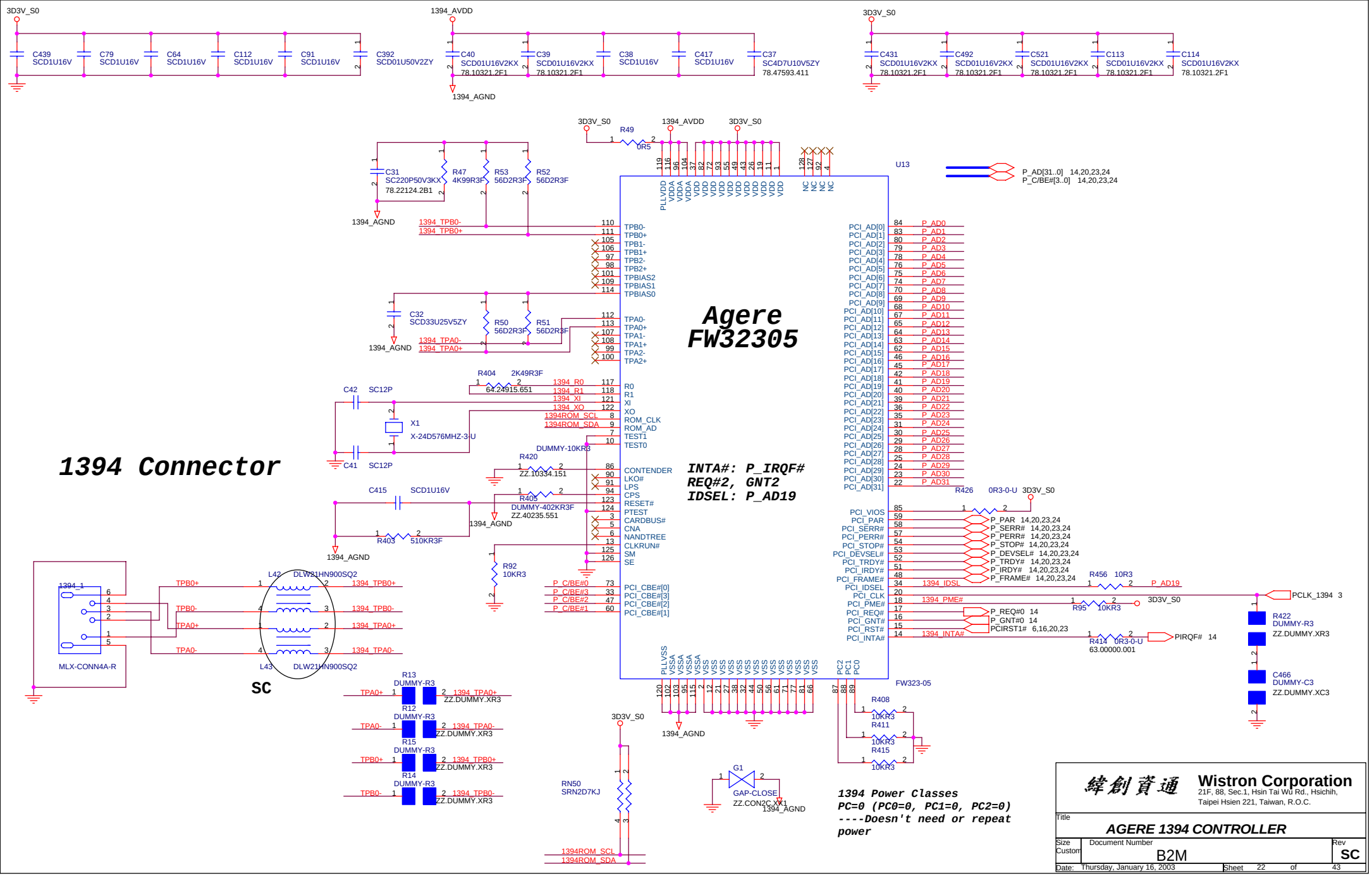


WWW.AliSaler.Com

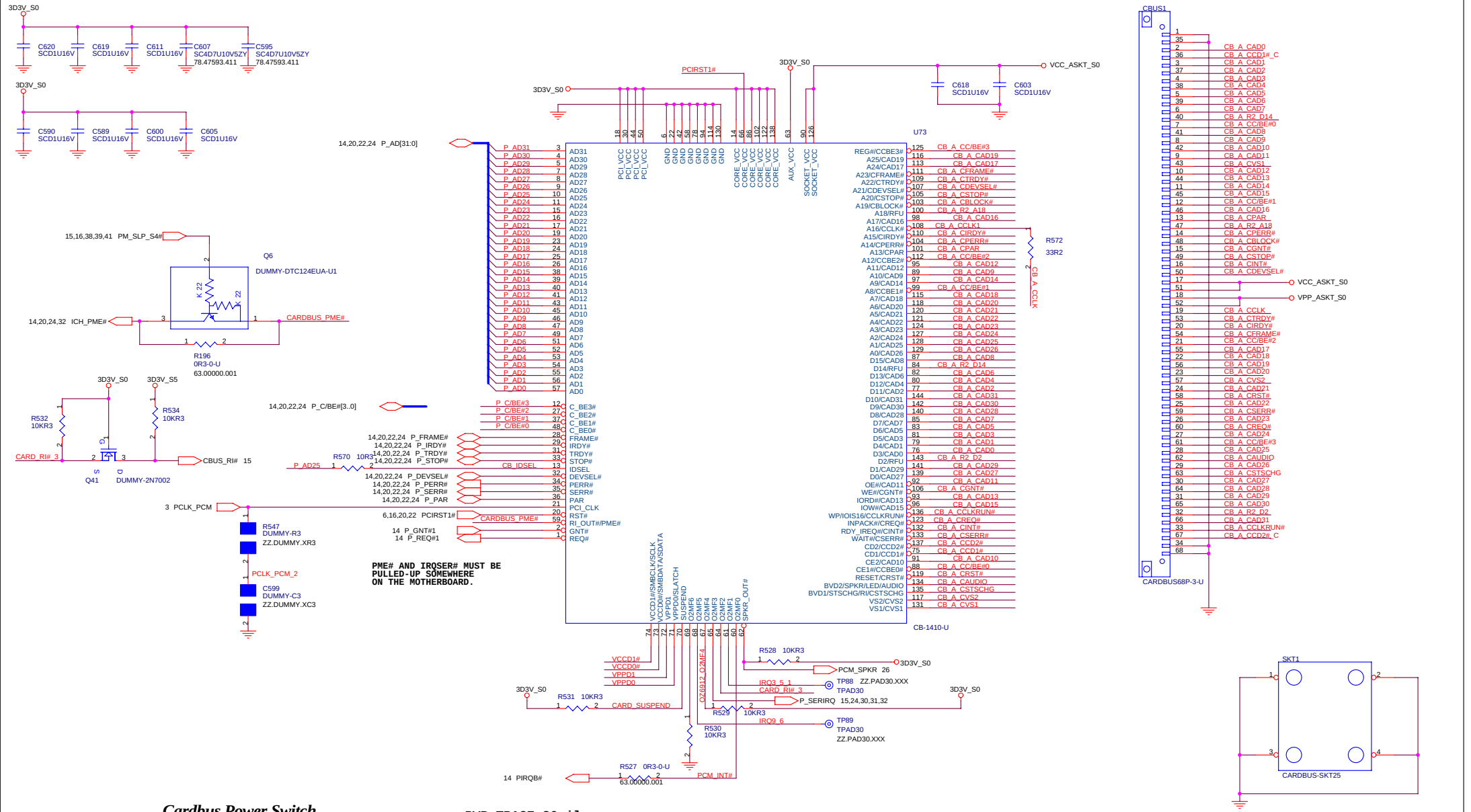


## Cardbus Power Switch

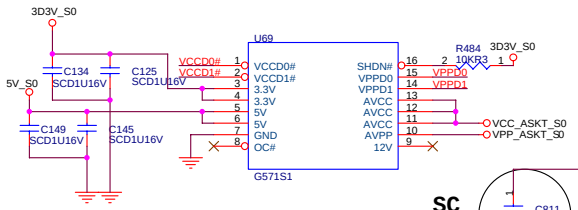


The object of using S3 power plane is to support WakeOnLan function of PCMCIA LAN Card

## PWR TRACE 30mil

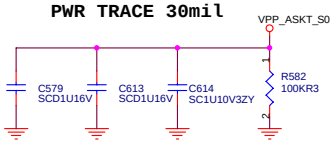


## PWR TRACE 50mil

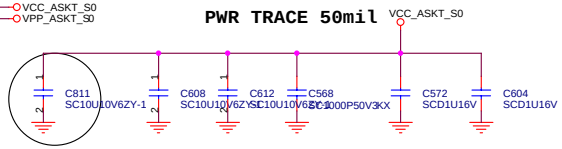


## CHIP side / CONN side

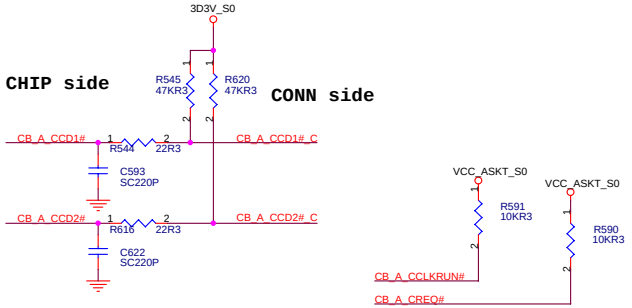



緯創資通 Wistron Corporation
21F, 88, Sec.1, Hsin Tai Wu Rd., Hsichih,
Taipei Hsien 221, Taiwan, R.O.C.


Title: **PCM Controller**

| Size | Document Number | Rev |
|---|---|---|
| Custom | B2M | SC |

Date: Thursday, January 16, 2003 Sheet 23 of 43

# Mini PCI (with BlueTooth)

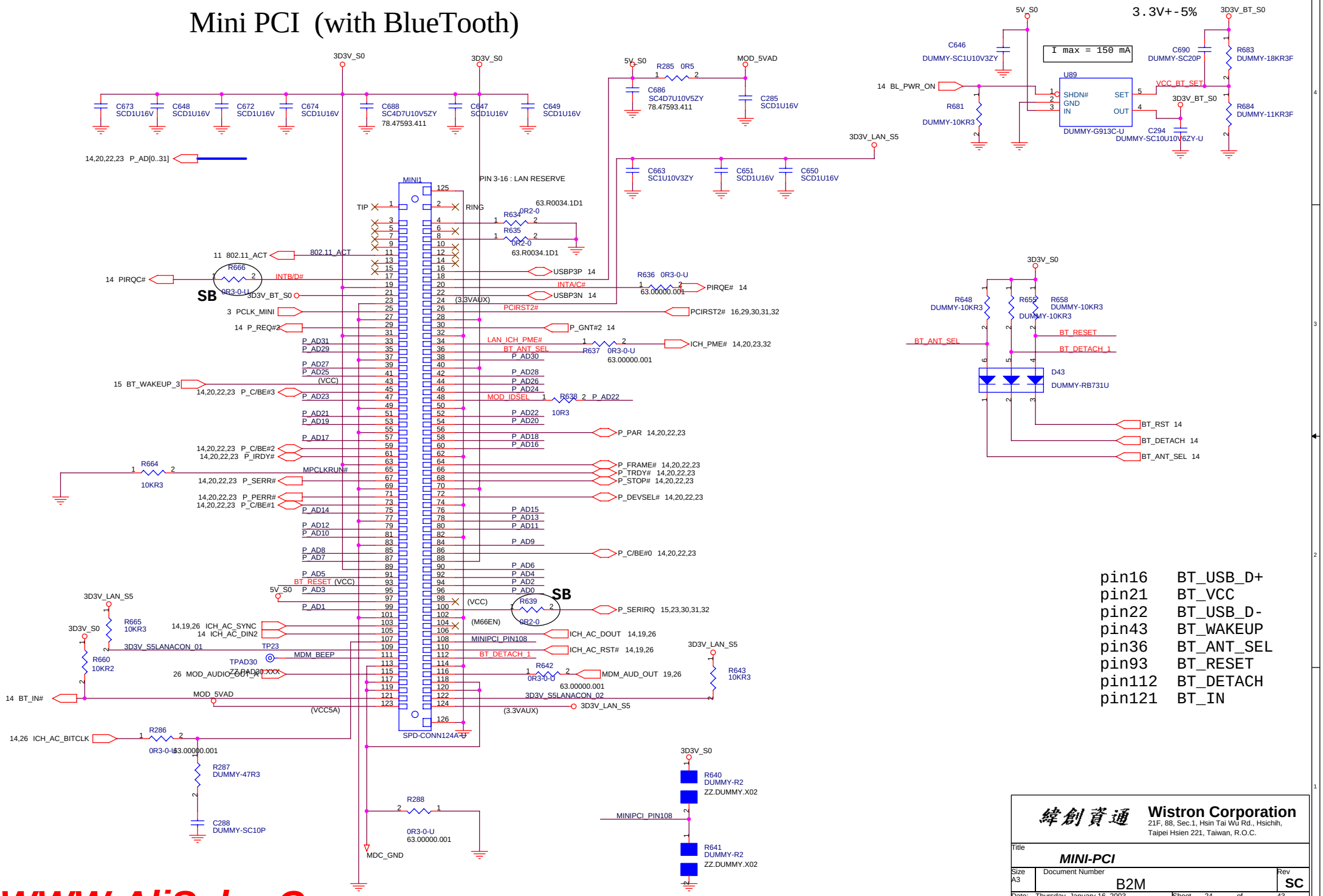


Wistron Corporation
21F, 88, Sec.1, Hsin Tai Wu Rd., Hsichih, Taipei Hsien 221, Taiwan, R.O.C.

Title: MINI-PCI

Size: A3 | Document Number: B2M | Rev: SC

Date: Thursday, January 16, 2003 | Sheet 24 of 43

WWW.AliSaler.Com

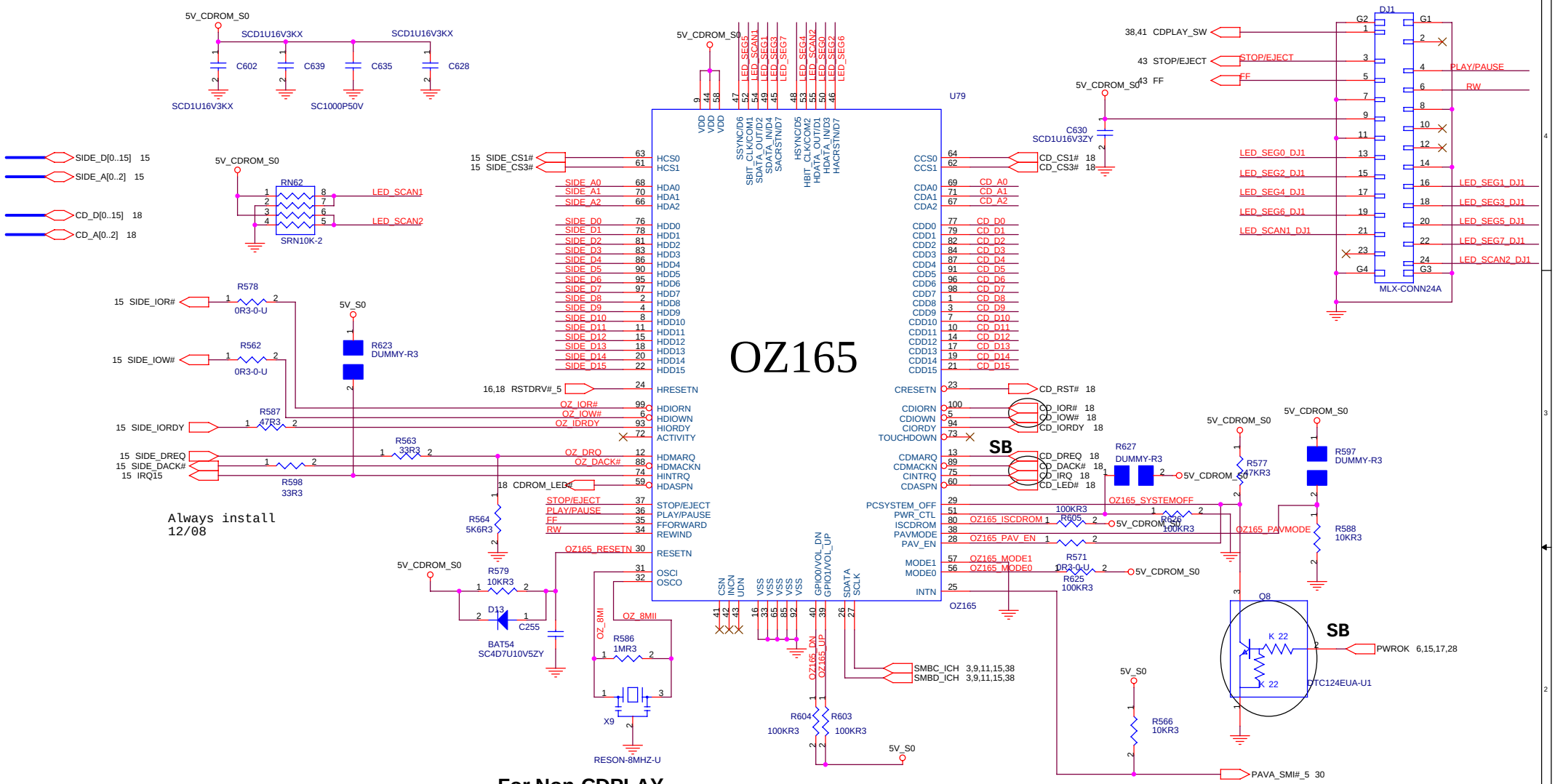


緯創資通 **Wistron Corporation**
21F, 88, Sec.1, Hsin Tai Wu Rd., Hsichih,
Taipei Hsien 221, Taiwan, R.O.C.

Title: ***CD Player Controller OZ165***

| Size | Document Number | Rev |
|---|---|---|
| A3 | B2M | SC |

Date: Thursday, January 16, 2003 Sheet 25 of 43

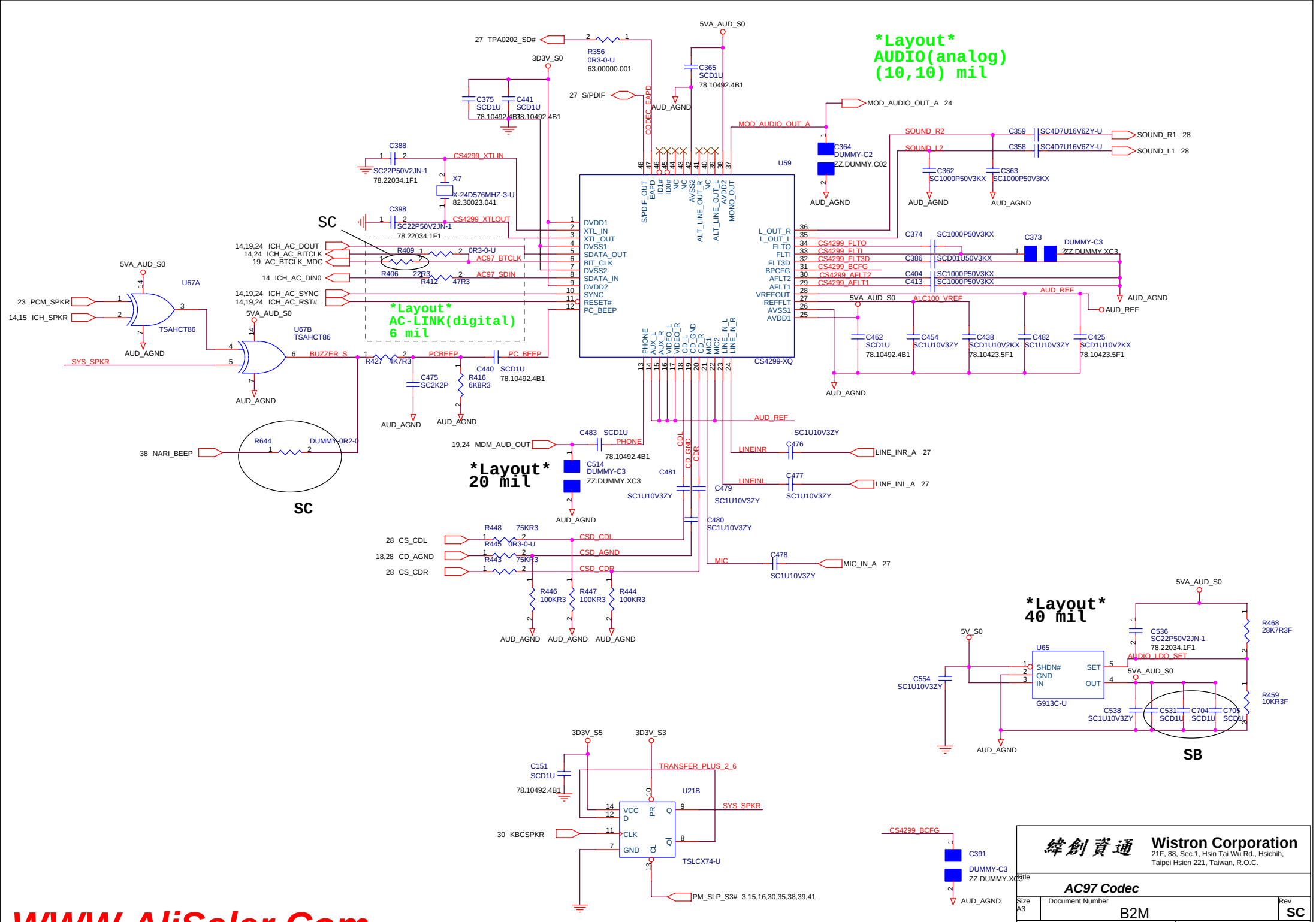


WWW.AliSaler.Com

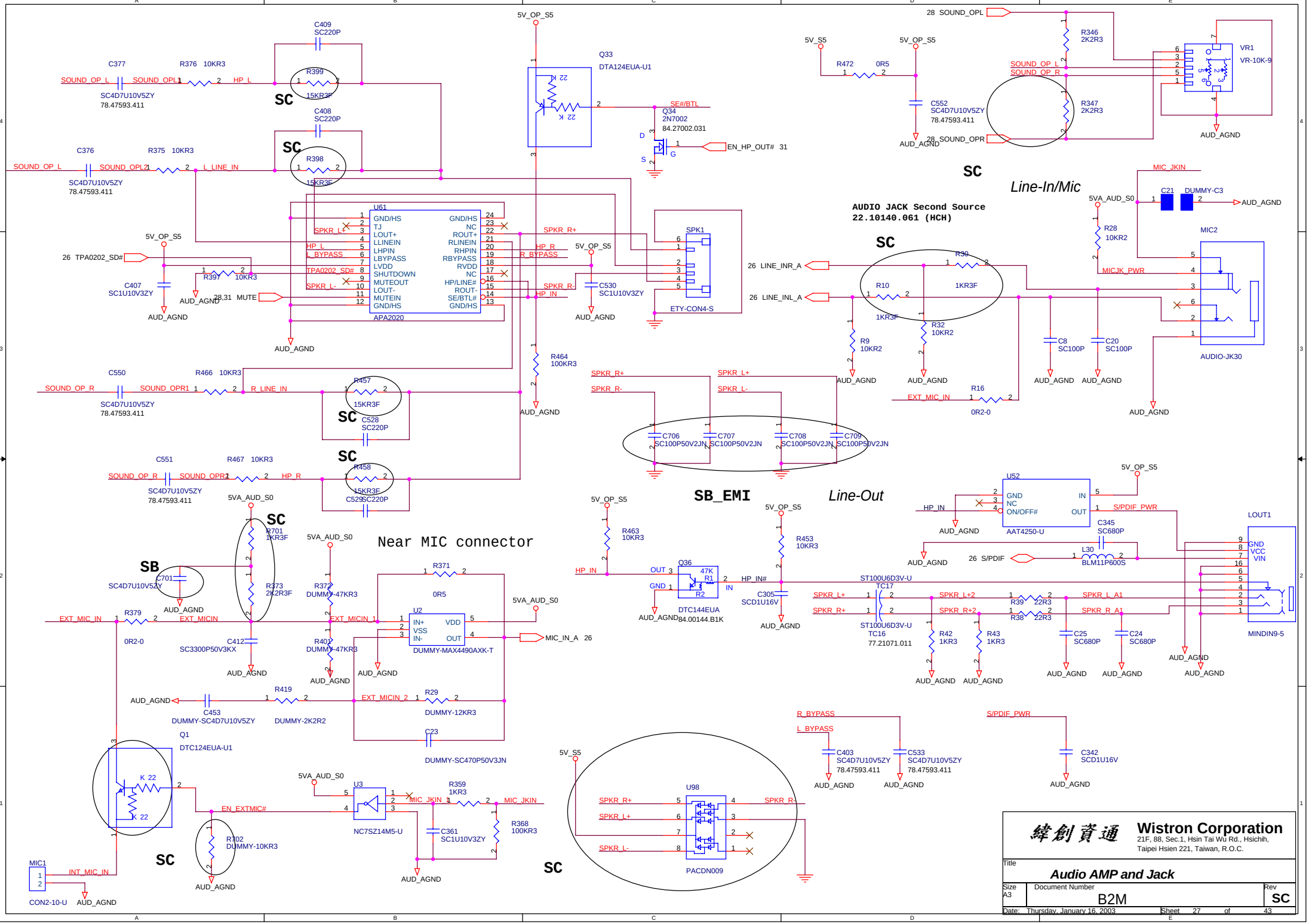
Line-In/Mic
AUDIO JACK Second Source
22.10140.061 (HCH)
Line-Out
SB_EMI
Near MIC connector
SC
SB
Wistron Corporation
21F, 88, Sec.1, Hsin Tai Wu Rd., Hsichih,
Taipei Hsien 221, Taiwan, R.O.C.
Title
Audio AMP and Jack
Document Number
B2M
Size
A3
Rev
SC
Date: Thursday, January 16, 2003
Sheet 27 of 43

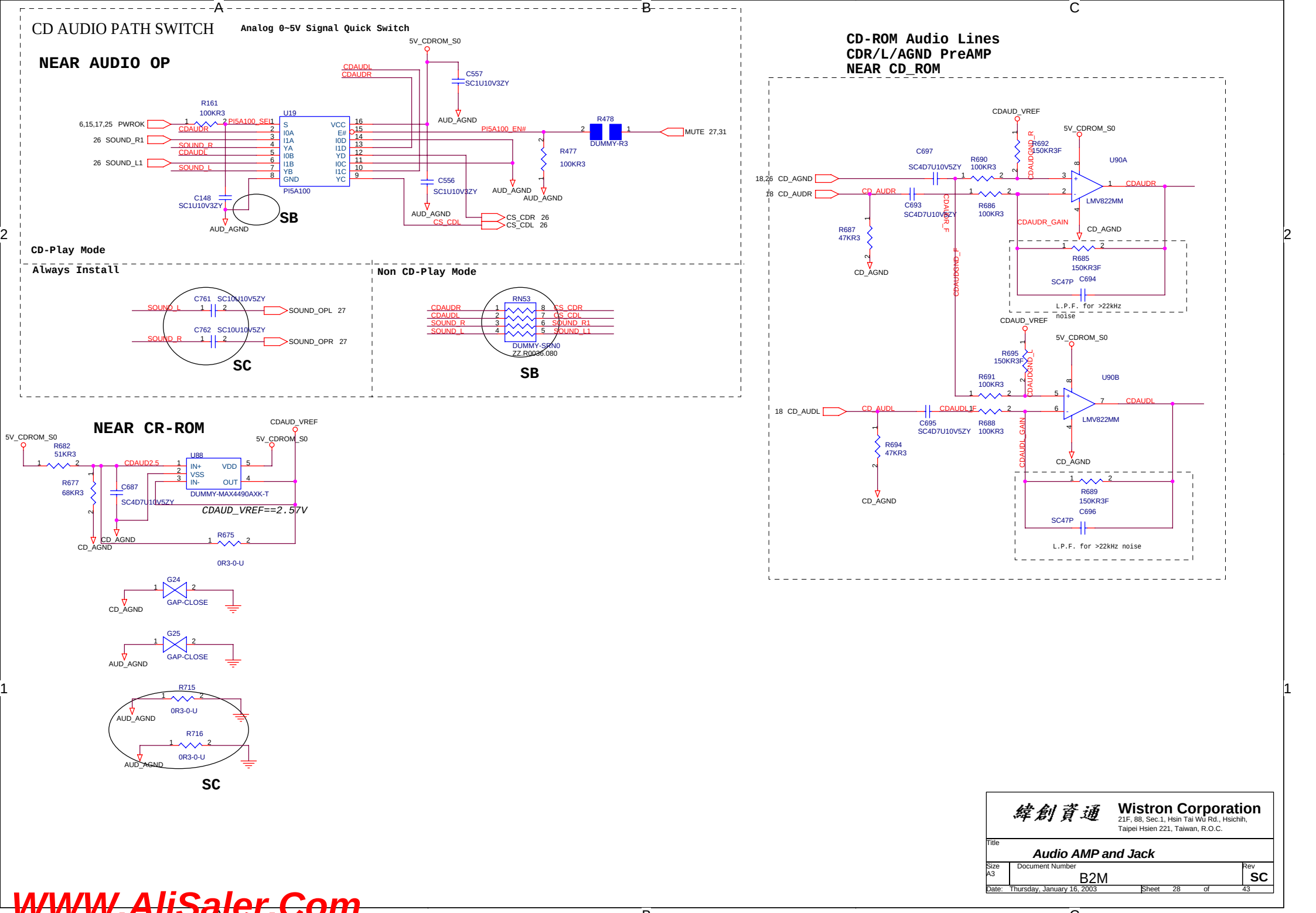


WWW.AliSaler.Com

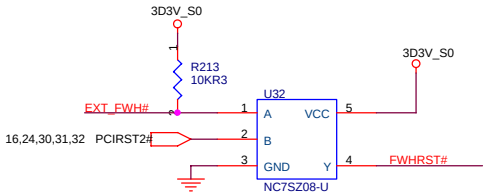


**Unused FGPI pins must not be float**

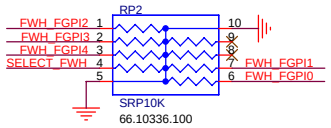


LPC_LAD[0..3] 15,30,31,32

## CHANGE VCORE

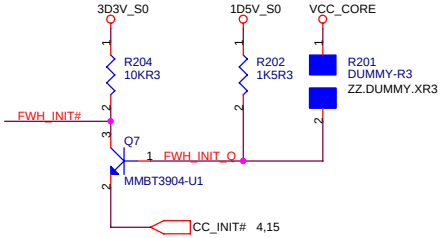


**TOP VIEW**

| | |
|---|---|
| A15 | (B1) |
| A14 | (B2) |
| ⋮ | ⋮ |
| A2 | (B14) |
| A1 | (B15) |

**(BOTTOM VIEW)**

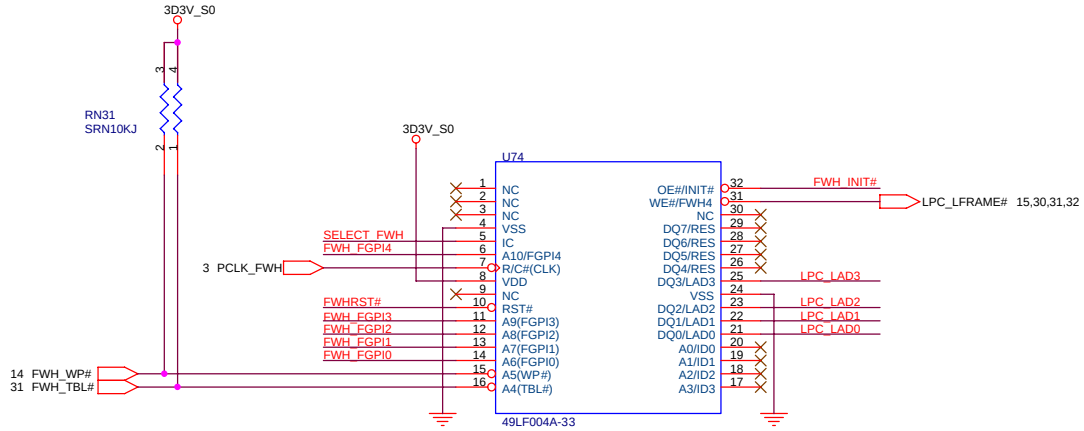


## GOLDEN FINGER FOR DEBUG BOARD

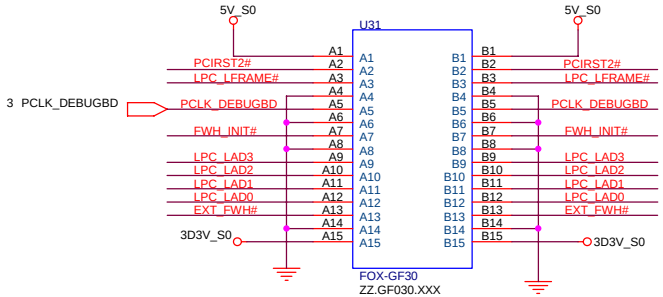


**Boot Device must have ID[3:0] = 0000**
**Has internal pull-down resistors**
**All may be left floated**
**FPET7 Elec. P3-46**

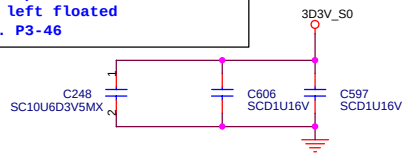



緯創資通 **Wistron Corporation**
21F, 88, Sec.1, Hsin Tai Wu Rd., Hsichih,
Taipei Hsien 221, Taiwan, R.O.C.


Title: ***FWH and Debug***

| Size | Document Number | Rev |
|---|---|---|
| A3 | B2M | SC |

Date: Thursday, January 16, 2003 Sheet 29 of 43

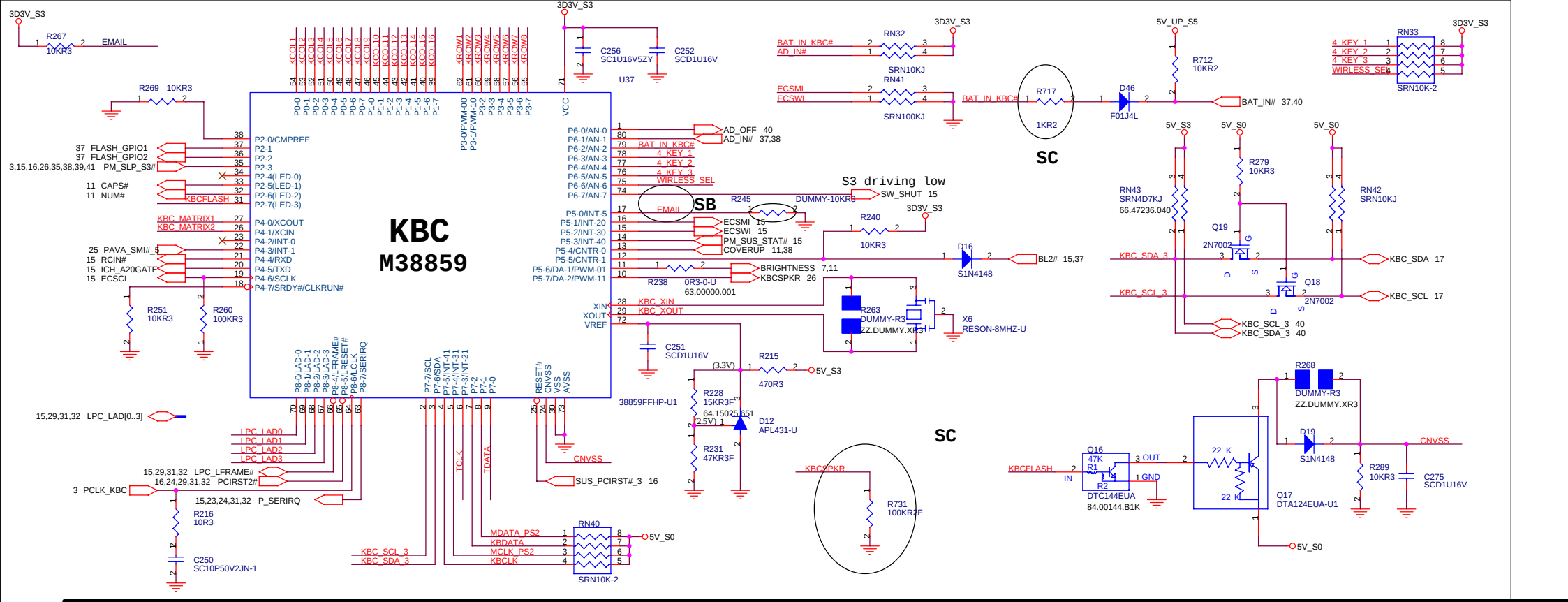


| | US | Jap | Europe | US international |
|---|---|---|---|---|
| MATRIX1 | HIGH | LOW | HIGH | HIGH |
| MATRIX2 | HIGH | HIGH | LOW | HIGH |


緯創資通 Wistron Corporation
21F, 88, Sec.1, Hsin Tai Wu Rd., Hsichih,
Taipei Hsien 221, Taiwan, R.O.C.


Title: KBC

Size: A3 | Document Number: B2M | Rev: SC

Date: Thursday, January 16, 2003 | Sheet 30 of 43

WWW.AliSaler.Com

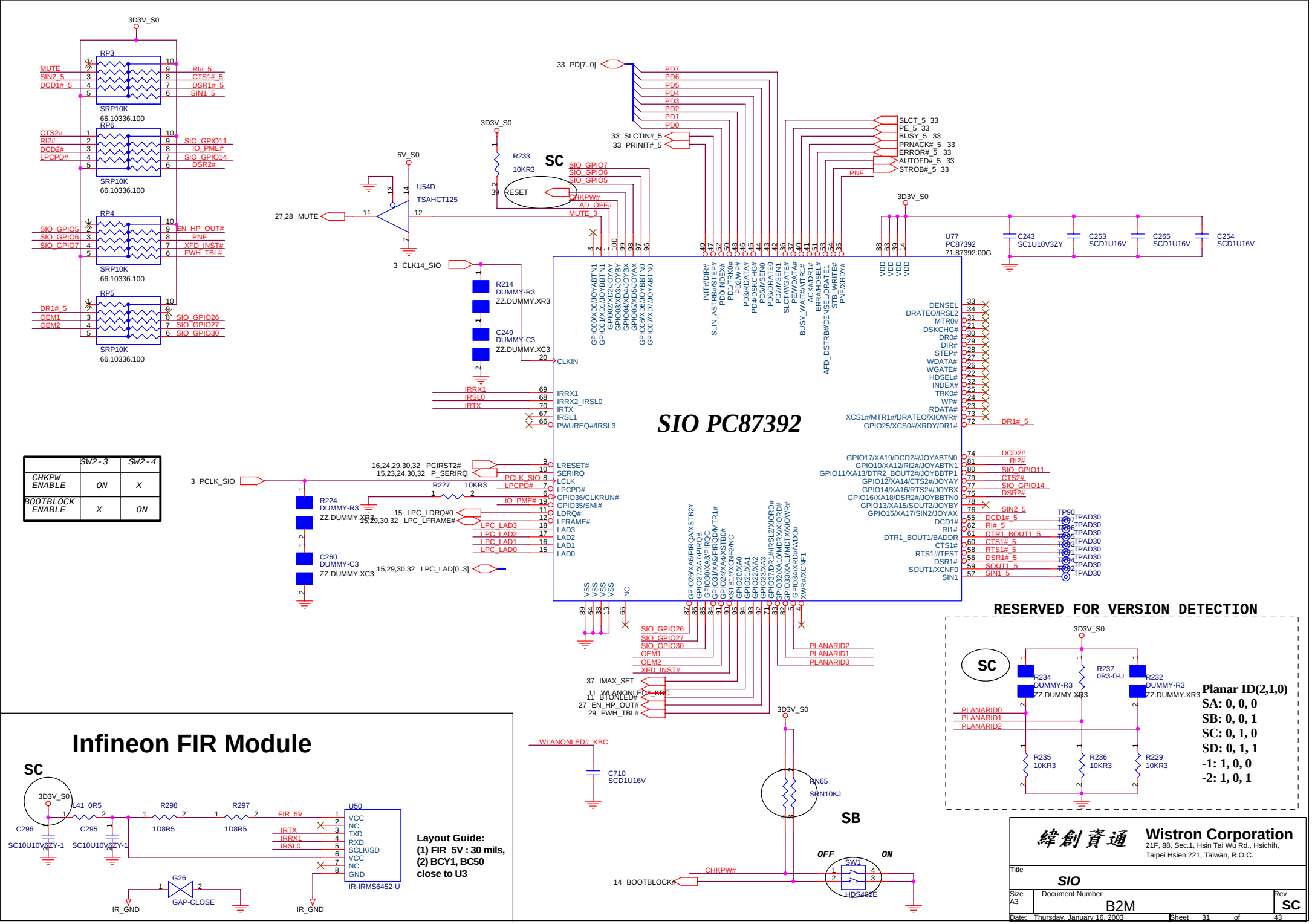
SIO PC87392
U77
PC87392
71.87392.00G
RESERVED FOR VERSION DETECTION
Planar ID(2,1,0)
SA: 0, 0, 0
SB: 0, 0, 1
SC: 0, 1, 0
SD: 0, 1, 1
-1: 1, 0, 0
-2: 1, 0, 1
Infineon FIR Module
Layout Guide:
(1) FIR_5V : 30 mils,
(2) BCY1, BC50
close to U3
Wistron Corporation
21F, 88, Sec.1, Hsin Tai Wu Rd., Hsichih,
Taipei Hsien 221, Taiwan, R.O.C.
Title
SIO
Size
A3
Document Number
B2M
Rev
SC
Date: Thursday, January 16, 2003
Sheet 31 of 43

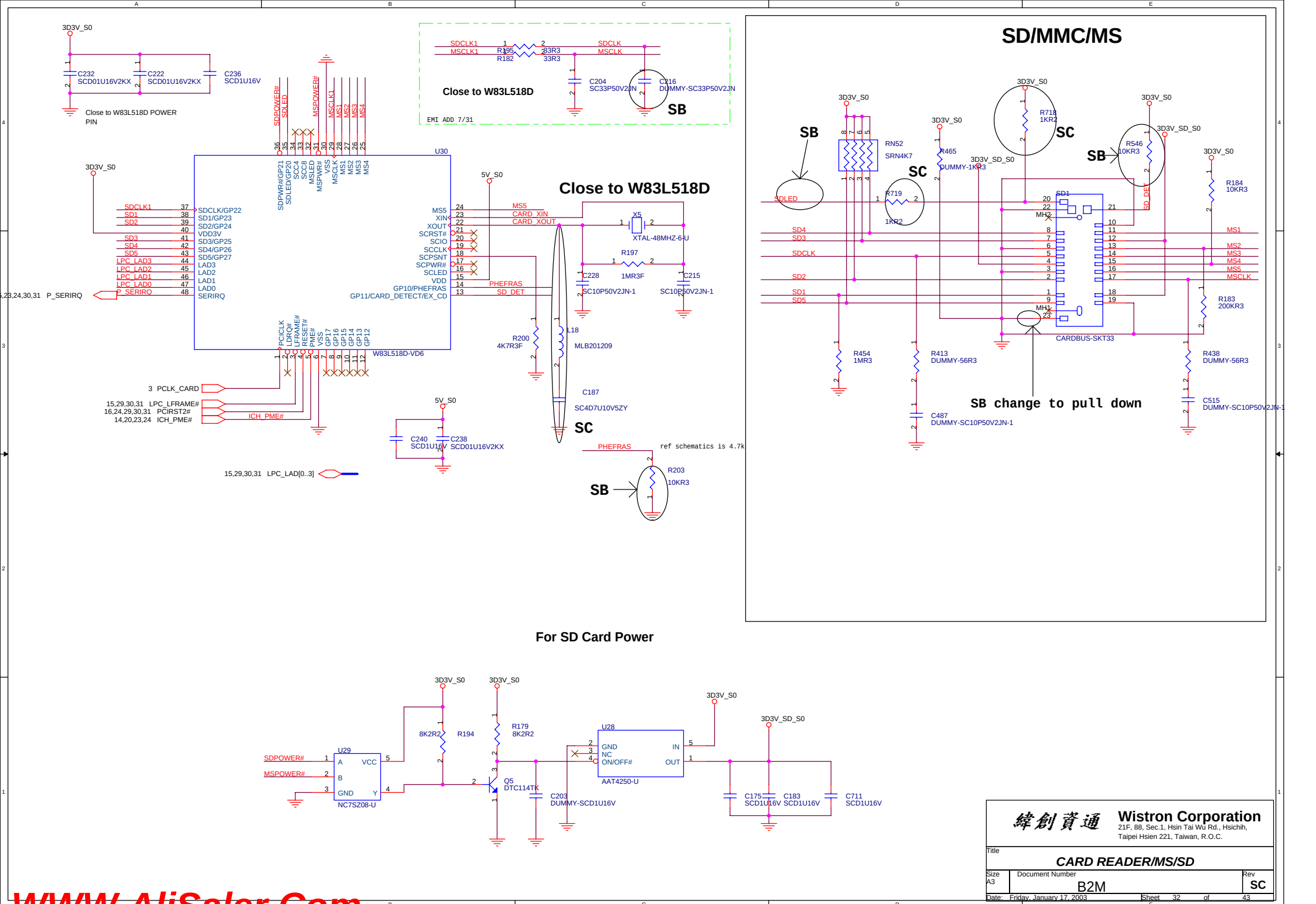


WWW.AliSaler.Com

# PRINTER PORT

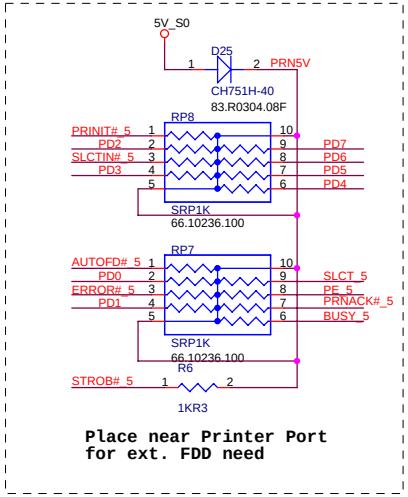


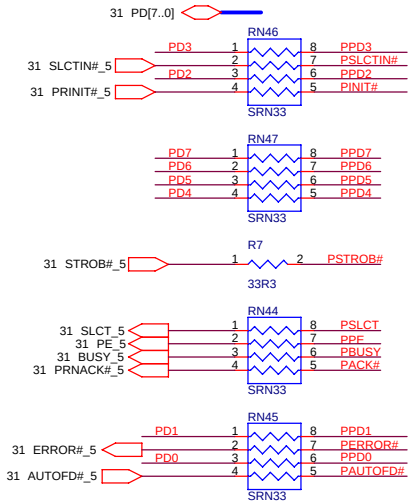


**Place CAPs close to CONN**

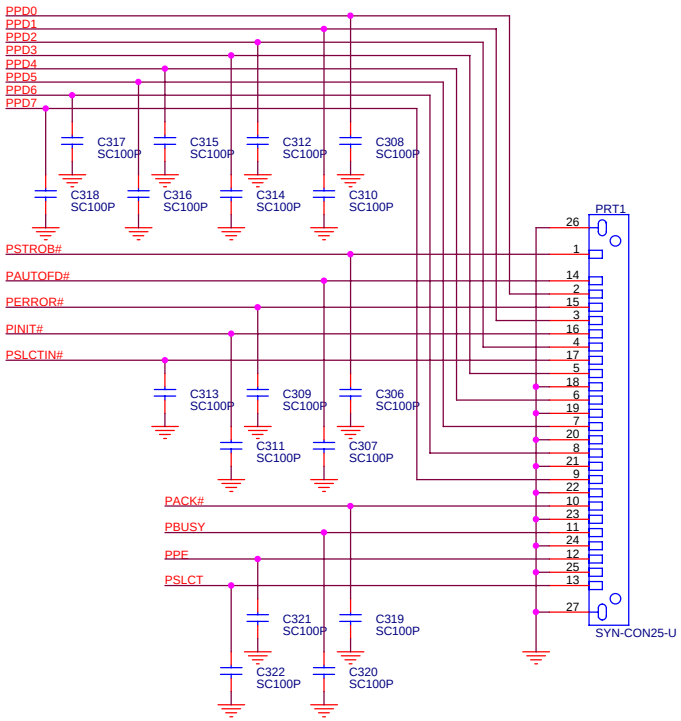


| | | |
|---|---|---|
| 緯創資通 | **Wistron Corporation**<br>21F, 88, Sec.1, Hsin Tai Wu Rd., Hsichih,<br>Taipei Hsien 221, Taiwan, R.O.C. | |
| Title | ***Parallel Port*** | |
| Size A3 | Document Number B2M | Rev **SC** |
| Date: Thursday, January 16, 2003 | Sheet 33 of 43 | |

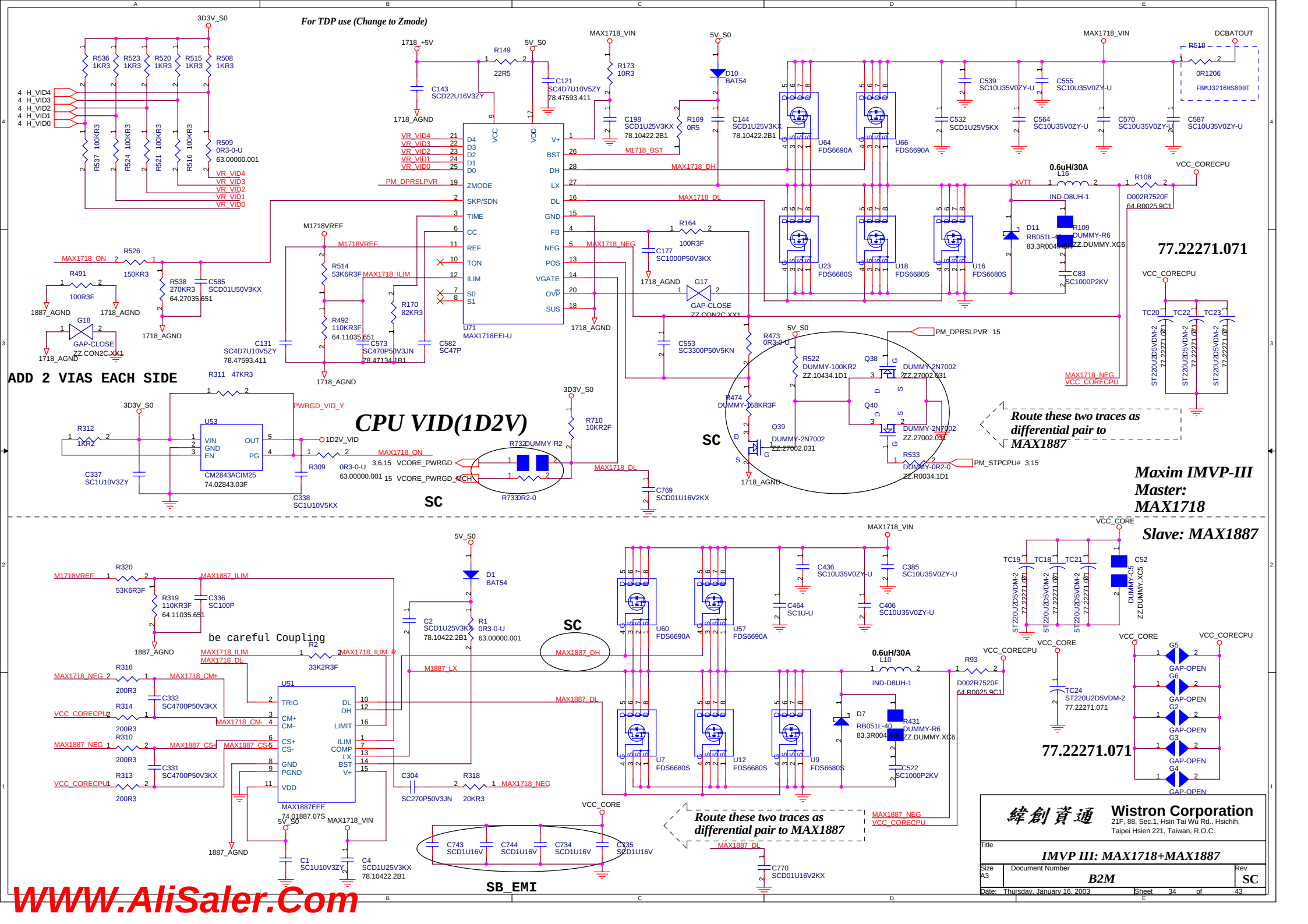


WWW.AliSaler.Com

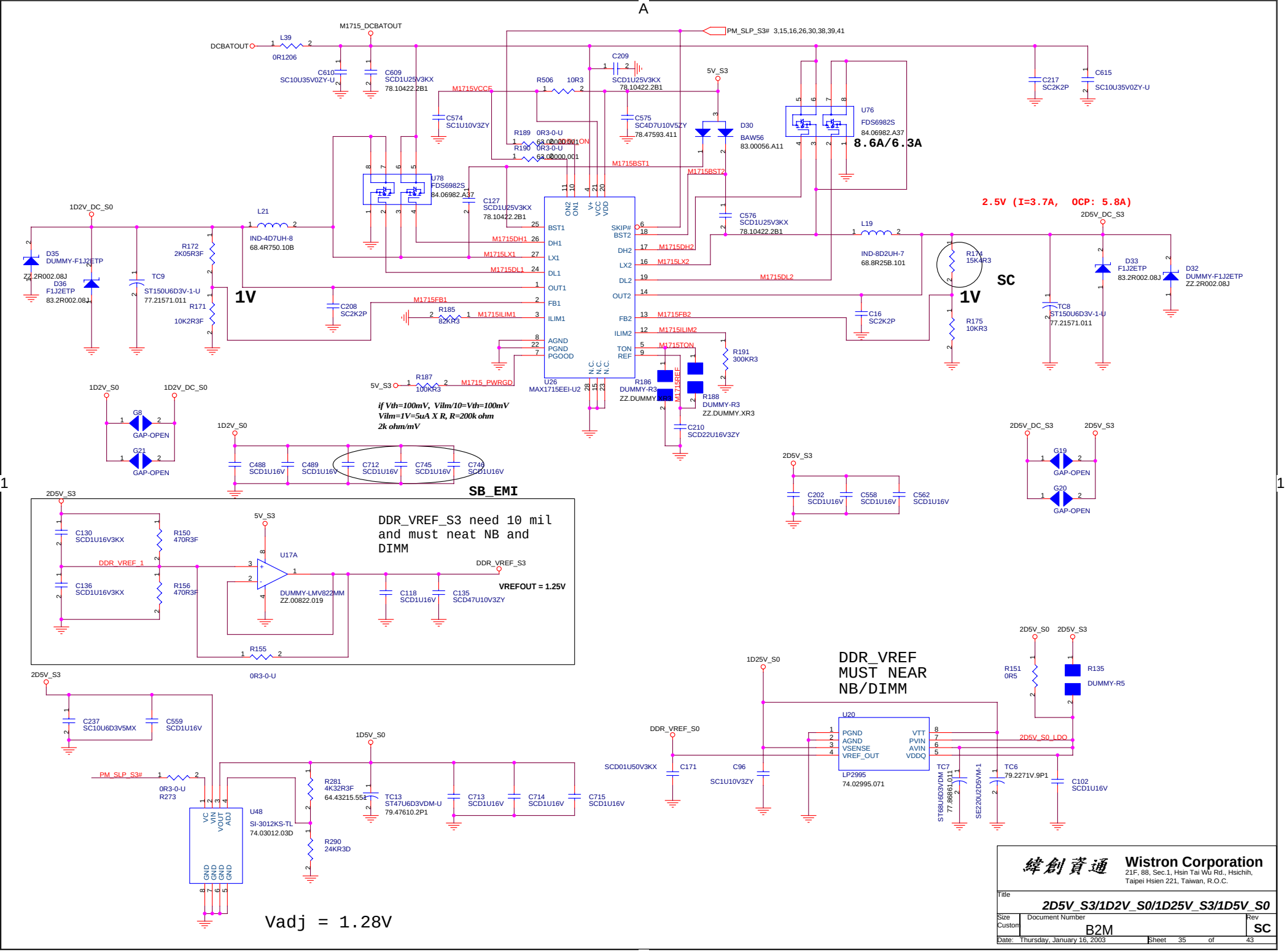


緯創資通 **Wistron Corporation**
21F, 88, Sec.1, Hsin Tai Wu Rd., Hsichih,
Taipei Hsien 221, Taiwan, R.O.C.

| | | | |
|---|---|---|---|
| Title | 2D5V_S3/1D2V_S0/1D25V_S3/1D5V_S0 | | |
| Size Custom | Document Number B2M | | Rev SC |
| Date: Thursday, January 16, 2003 | Sheet 35 of 43 | | |

# SYSTEM DC/DC
# 3D3V_S5/5V_S5/1D5V_S5

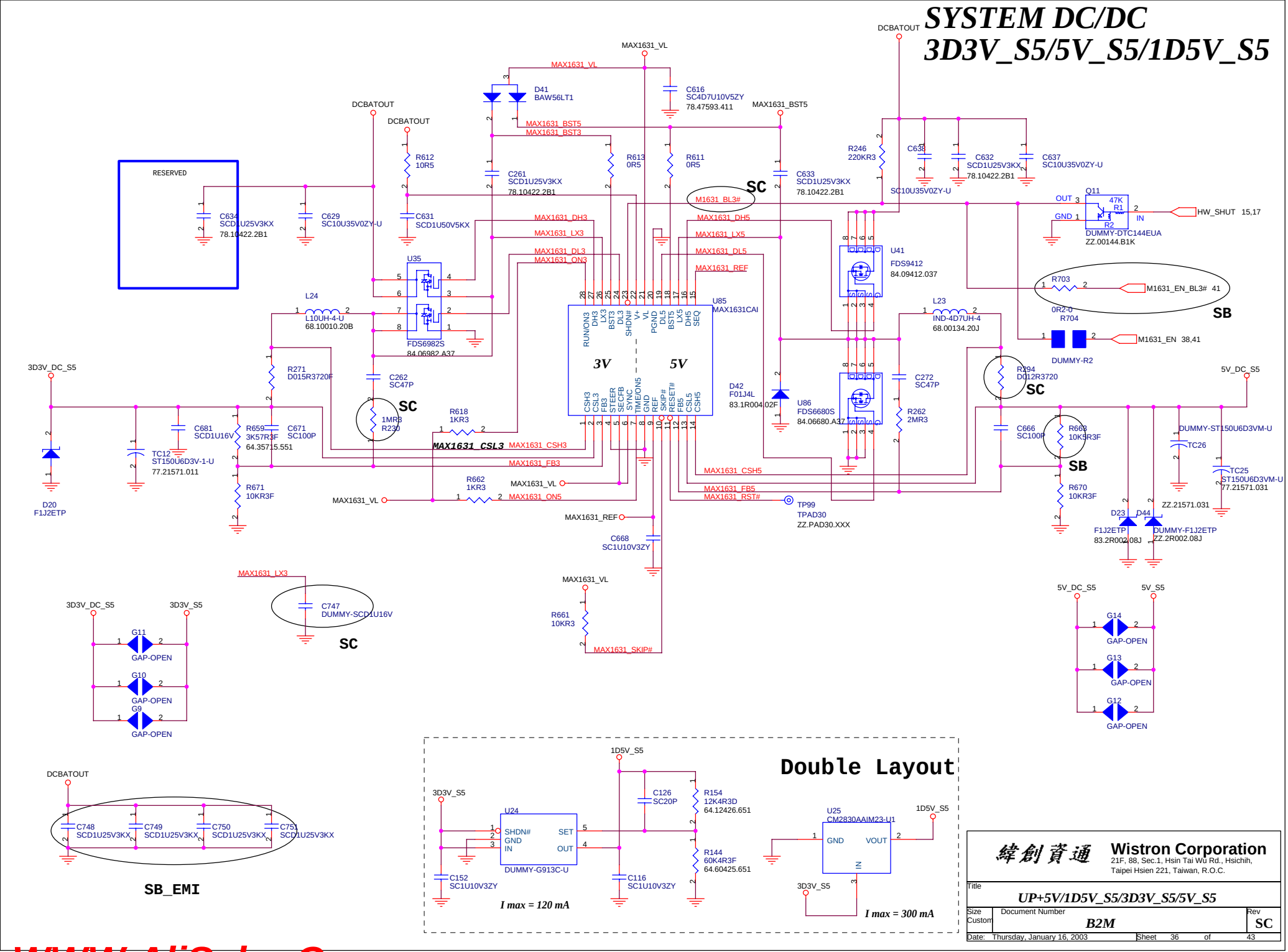


| | |
|---|---|
| 緯創資通 | **Wistron Corporation** 21F, 88, Sec.1, Hsin Tai Wu Rd., Hsichih, Taipei Hsien 221, Taiwan, R.O.C. |
| Title | *UP+5V/1D5V_S5/3D3V_S5/5V_S5* |
| Size Custom | Document Number *B2M* Rev SC |
| Date: Thursday, January 16, 2003 | Sheet 36 of 43 |

WWW.AliSaler.Com

60W
R1469=100K,R1468=140K,R1465=0
Imax=2.98A
AD POWER=19*2.98=56.62W

70W
R1469=100K,R1468=140K,R1465=75K
Imax=3.49A
AD POWER=19*3.49=66.31W

Imax= 2.0V/(20*0.02 ohm) = 5A

SB

SC

SB_EMI

60W IMAX_SET=>HIGH
70W IMAX_SET=>LOW

CHANGE TO 68.1501B.101

CHANGE TO 33U

0x12

notice sense resistor noise and trace

*Layout*
15 mil

Pull-UP in KBC

ATTINY12L-4SI(FLASH)
REPLACE PIC12C509

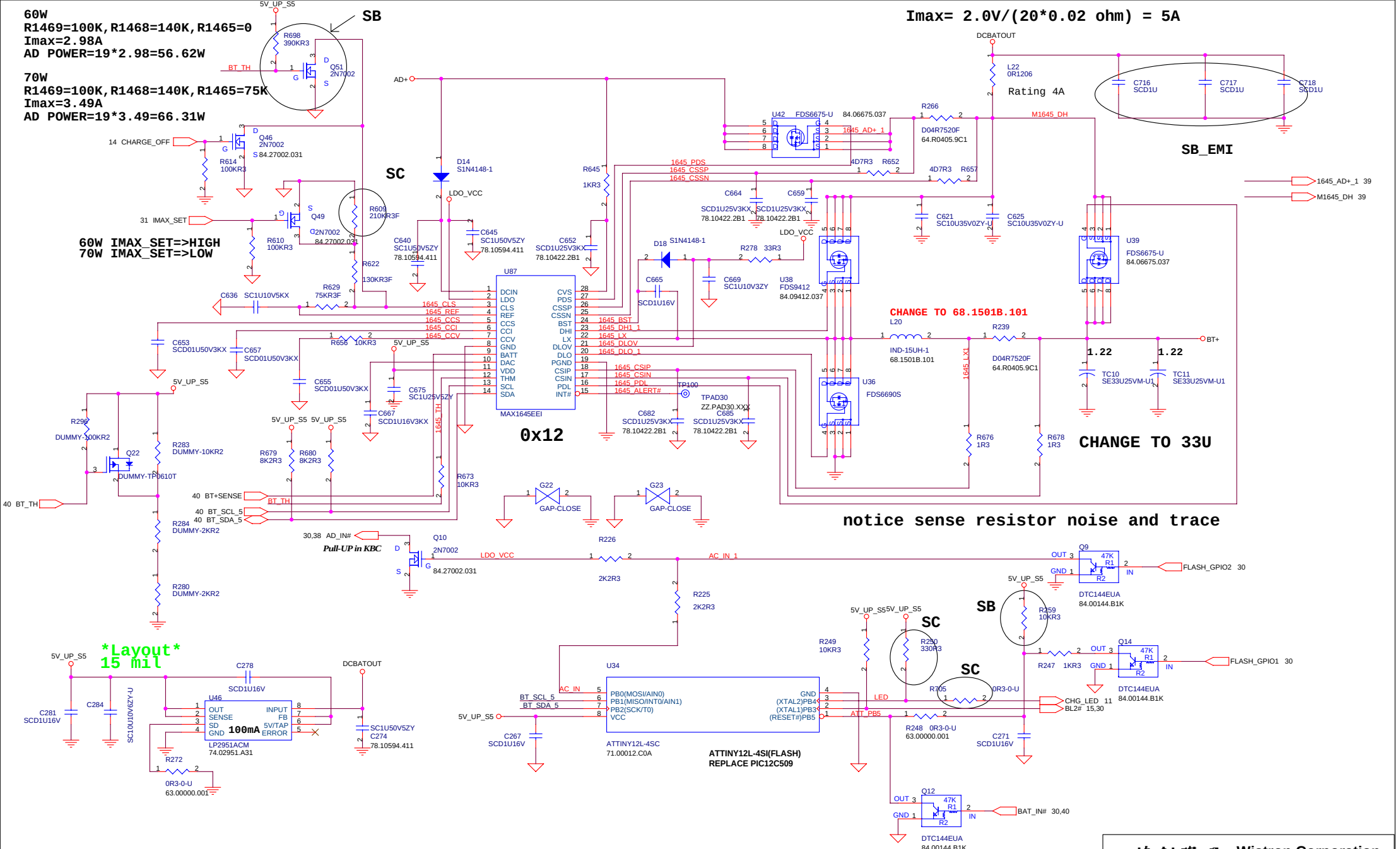


| | |
|---|---|
| 緯創資通 | Wistron Corporation<br>21F, 88, Sec.1, Hsin Tai Wu Rd., Hsichih,<br>Taipei Hsien 221, Taiwan, R.O.C. |
| Title | CHARGER&MicroP |
| Size Custom | Document Number B2M |
| Rev | SC |
| Date: Friday, January 17, 2003 | Sheet 37 of 43 |

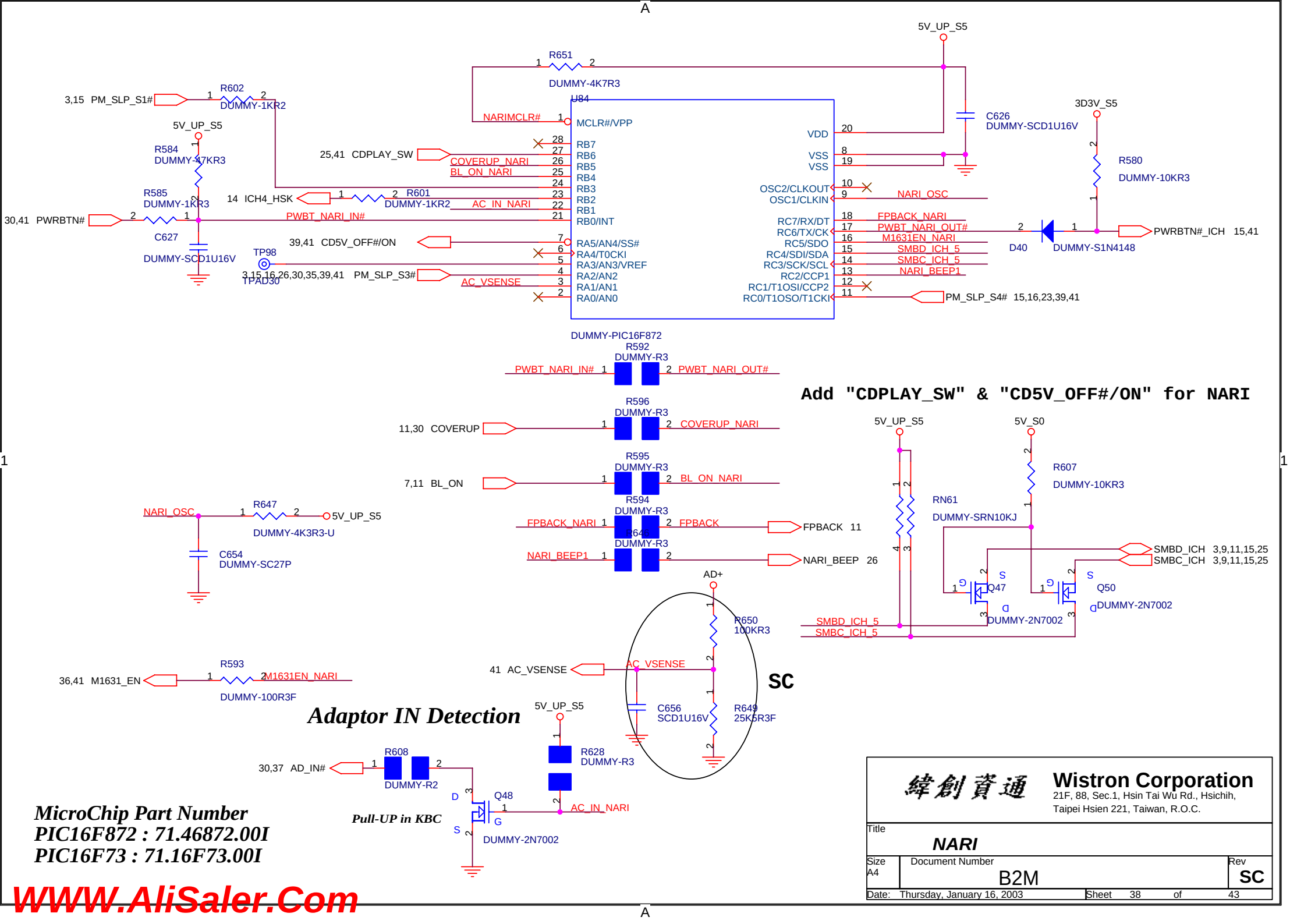
5V_UP_S5
R651
DUMMY-4K7R3
U84
3,15 PM_SLP_S1#
R602
DUMMY-1KR2
NARIMCLR#
MCLR#/VPP
C626
DUMMY-SCD1U16V
3D3V_S5
5V_UP_S5
R584
DUMMY-47KR3
25,41 CDPLAY_SW
COVERUP_NARI
BL_ON_NARI
VDD
VSS
VSS
R580
DUMMY-10KR3
R585
DUMMY-1KR3
14 ICH4_HSK
R601
DUMMY-1KR2
AC_IN_NARI
OSC2/CLKOUT
OSC1/CLKIN
NARI_OSC
30,41 PWRBTN#
PWBT_NARI_IN#
FPBACK_NARI
PWBT_NARI_OUT#
M1631EN_NARI
SMBD_ICH_5
SMBC_ICH_5
NARI_BEEP1
PWRBTN#_ICH 15,41
D40
DUMMY-S1N4148
C627
DUMMY-SCD1U16V
39,41 CD5V_OFF#/ON
TP98
TPAD30
3,15,16,26,30,35,39,41 PM_SLP_S3#
AC_VSENSE
PM_SLP_S4# 15,16,23,39,41
RB7
RB6
RB5
RB4
RB3
RB2
RB1
RB0/INT
RA5/AN4/SS#
RA4/T0CKI
RA3/AN3/VREF
RA2/AN2
RA1/AN1
RA0/AN0
RC7/RX/DT
RC6/TX/CK
RC5/SDO
RC4/SDI/SDA
RC3/SCK/SCL
RC2/CCP1
RC1/T1OSI/CCP2
RC0/T1OSO/T1CKI
DUMMY-PIC16F872
R592
DUMMY-R3
PWBT_NARI_IN#
PWBT_NARI_OUT#
Add "CDPLAY_SW" & "CD5V_OFF#/ON" for NARI
R596
DUMMY-R3
11,30 COVERUP
COVERUP_NARI
5V_UP_S5
5V_S0
R595
DUMMY-R3
7,11 BL_ON
BL_ON_NARI
R607
DUMMY-10KR3
RN61
DUMMY-SRN10KJ
R594
DUMMY-R3
FPBACK_NARI
FPBACK
FPBACK 11
R646
DUMMY-R3
NARI_BEEP1
NARI_BEEP 26
SMBD_ICH 3,9,11,15,25
SMBC_ICH 3,9,11,15,25
NARI_OSC
R647
DUMMY-4K3R3-U
5V_UP_S5
C654
DUMMY-SC27P
Q47
Q50
DUMMY-2N7002
SMBD_ICH_5
SMBC_ICH_5
AD+
R650
100KR3
41 AC_VSENSE
AC_VSENSE
SC
36,41 M1631_EN
R593
M1631EN_NARI
DUMMY-100R3F
C656
SCD1U16V
R649
25K5R3F
Adaptor IN Detection
5V_UP_S5
R628
DUMMY-R3
30,37 AD_IN#
R608
DUMMY-R2
Q48
AC_IN_NARI
Pull-UP in KBC
DUMMY-2N7002
MicroChip Part Number
PIC16F872 : 71.46872.00I
PIC16F73 : 71.16F73.00I
WWW.AliSaler.Com
緯創資通
Wistron Corporation
21F, 88, Sec.1, Hsin Tai Wu Rd., Hsichih,
Taipei Hsien 221, Taiwan, R.O.C.
Title
NARI
Size
A4
Document Number
B2M
Rev
SC
Date: Thursday, January 16, 2003
Sheet 38 of 43

# CPU VID(1D2V)

**SPEC. FOR DT NORTHWOOD CPU =>150mA**
**FOR MB NORTHWOOD CPU =>300mA**

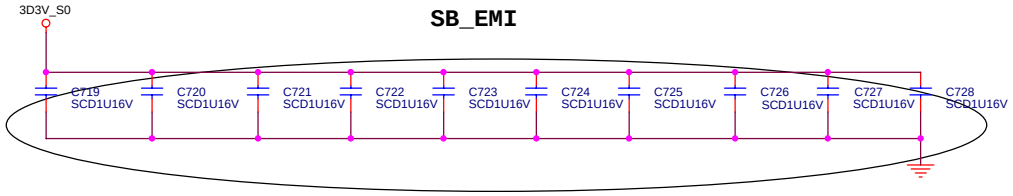


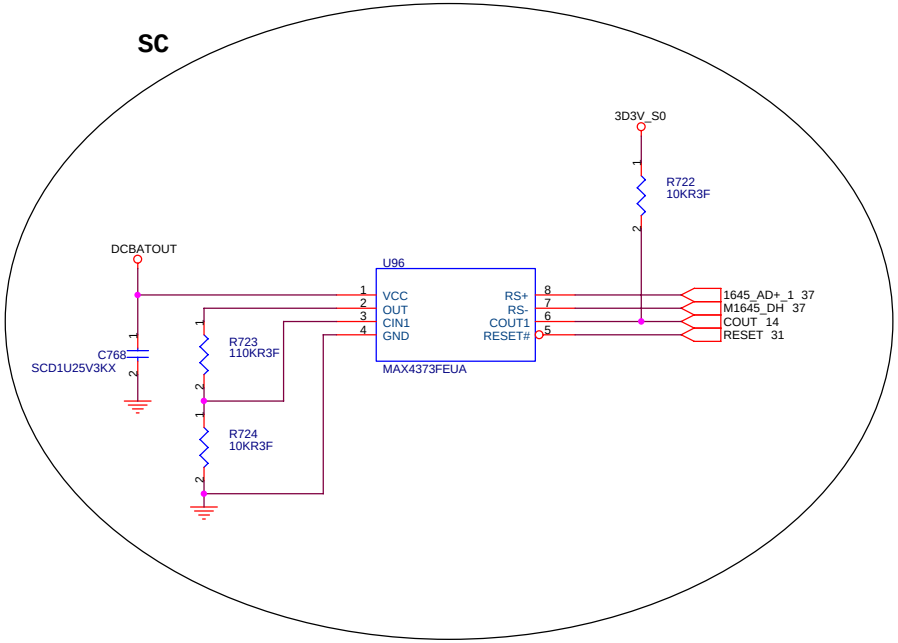


# Run Power

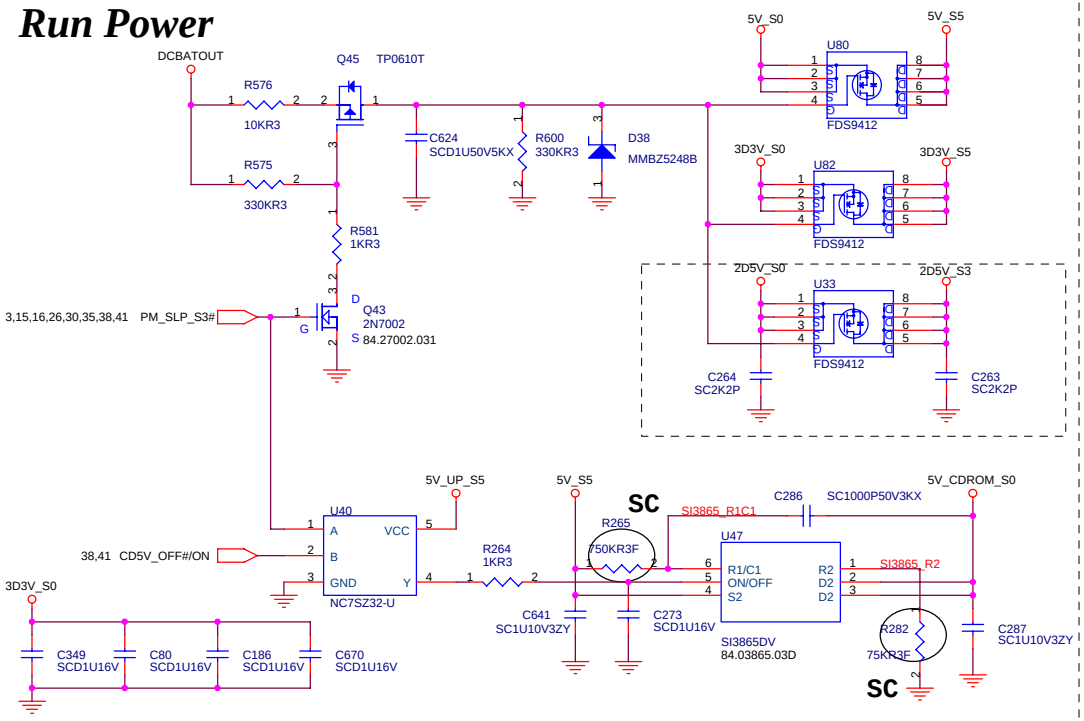


# Suspend Power

**Support standby wakeup LAN only**

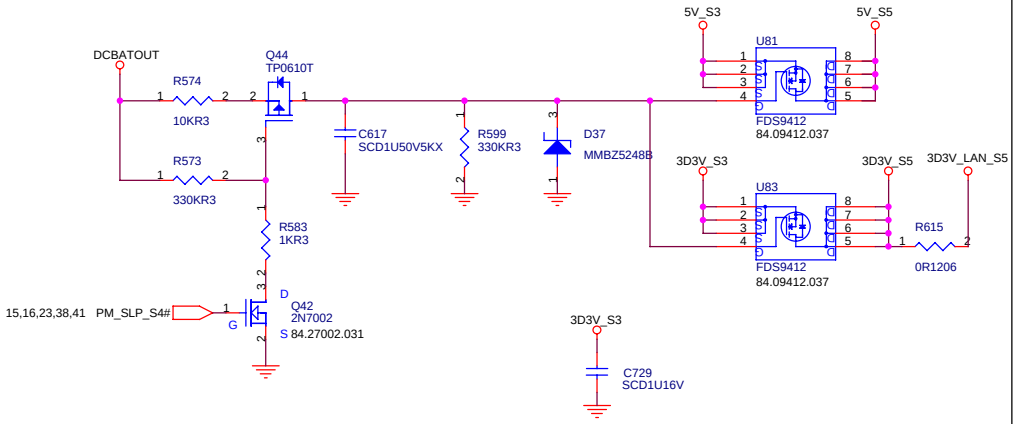


| | | |
|---|---|---|
| 緯創資通 | **Wistron Corporation** 21F, 88, Sec.1, Hsin Tai Wu Rd., Hsichih, Taipei Hsien 221, Taiwan, R.O.C. | |
| Title | ***PWRPLANE&RESETLOGIC*** | |
| Size A3 | Document Number B2M | Rev SC |
| Date: Thursday, January 16, 2003 | Sheet 39 of 43 | |

# Adaptor in to generate DCBATOUT

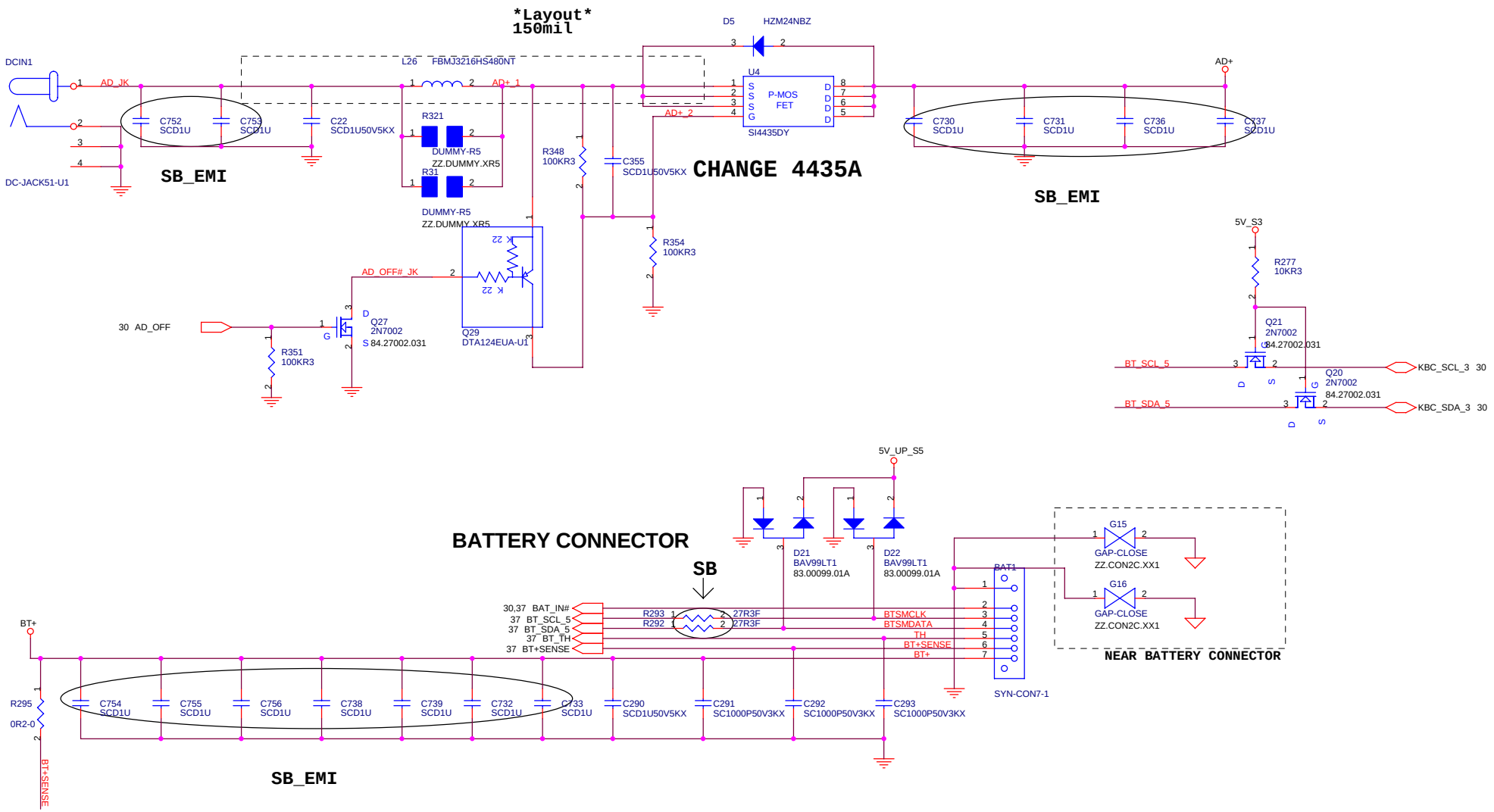


緯創資通 **Wistron Corporation**
21F, 88, Sec.1, Hsin Tai Wu Rd., Hsichih,
Taipei Hsien 221, Taiwan, R.O.C.

| Title | | |
|---|---|---|
| | ***AD/BATT CONN*** | |
| Size A3 | Document Number B2M | Rev **SC** |
| Date: Thursday, January 16, 2003 | Sheet 40 of 43 | |

WWW.AliSaler.Com

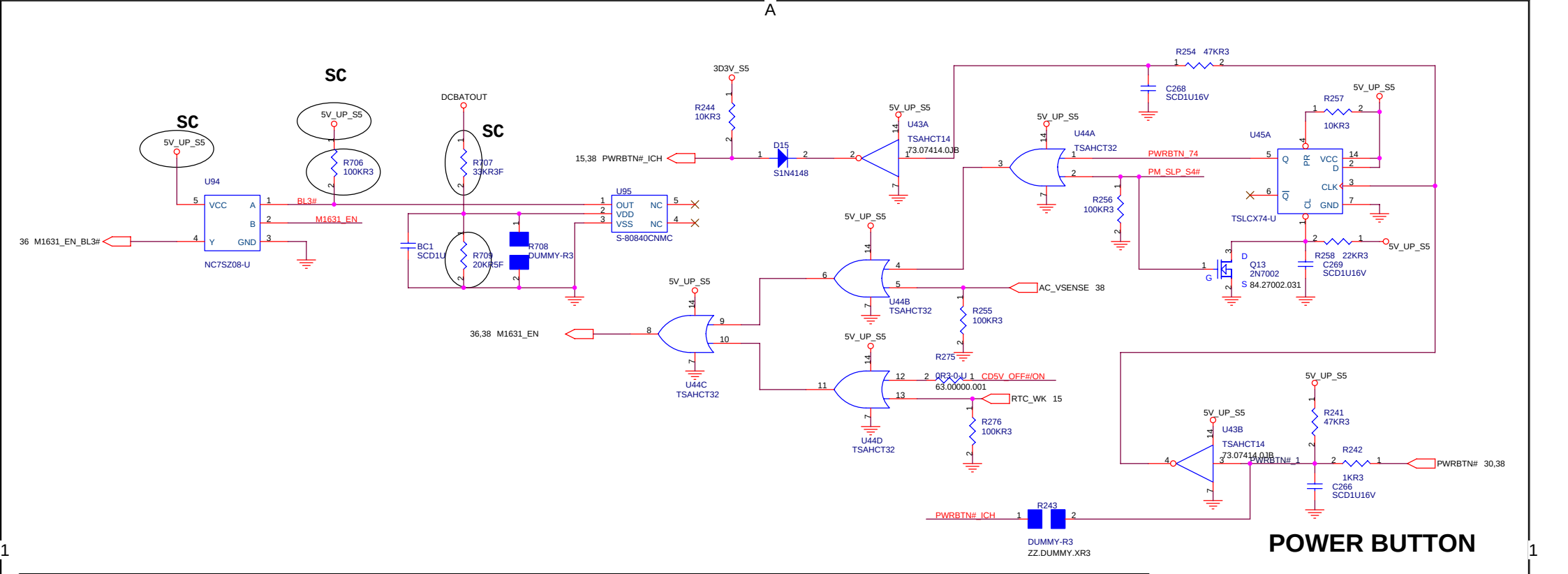


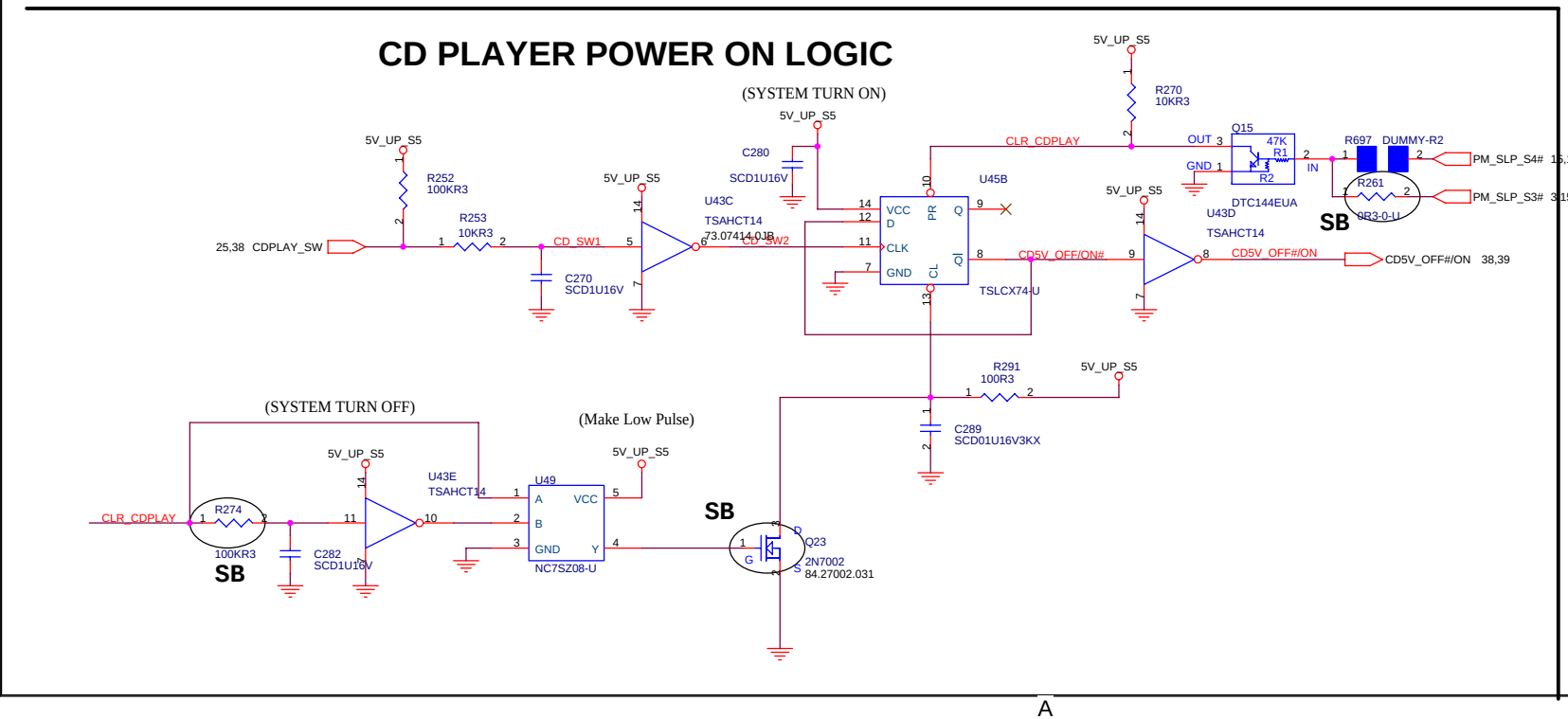


| | |
|---|---|
| 緯創資通 | **Wistron Corporation**<br>21F, 88, Sec.1, Hsin Tai Wu Rd., Hsichih,<br>Taipei Hsien 221, Taiwan, R.O.C. |
| Title | ***POWER ON CIRCUIT*** |
| Size A3 | Document Number B2M — Rev **SC** |
| Date: Thursday, January 16, 2003 | Sheet 41 of 43 |

# NO USE LOGIC

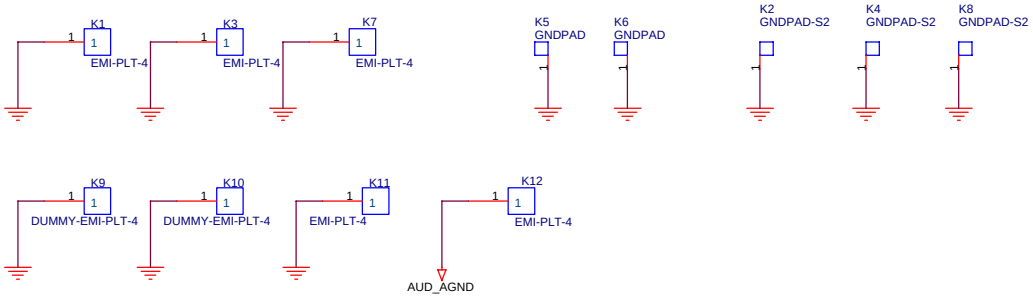


## SC

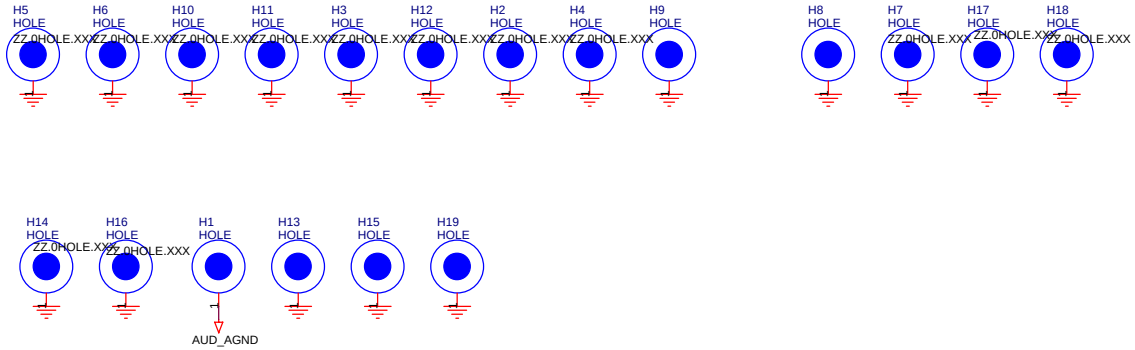



緯創資通 Wistron Corporation
21F, 88, Sec.1, Hsin Tai Wu Rd., Hsichih,
Taipei Hsien 221, Taiwan, R.O.C.


| Title | | |
|---|---|---|
| MISC | | |
| Size A3 | Document Number B2M | Rev SC |
| Date: Thursday, January 16, 2003 | Sheet 42 of 43 | |

WWW.AliSaler.Com

# SC_EMI

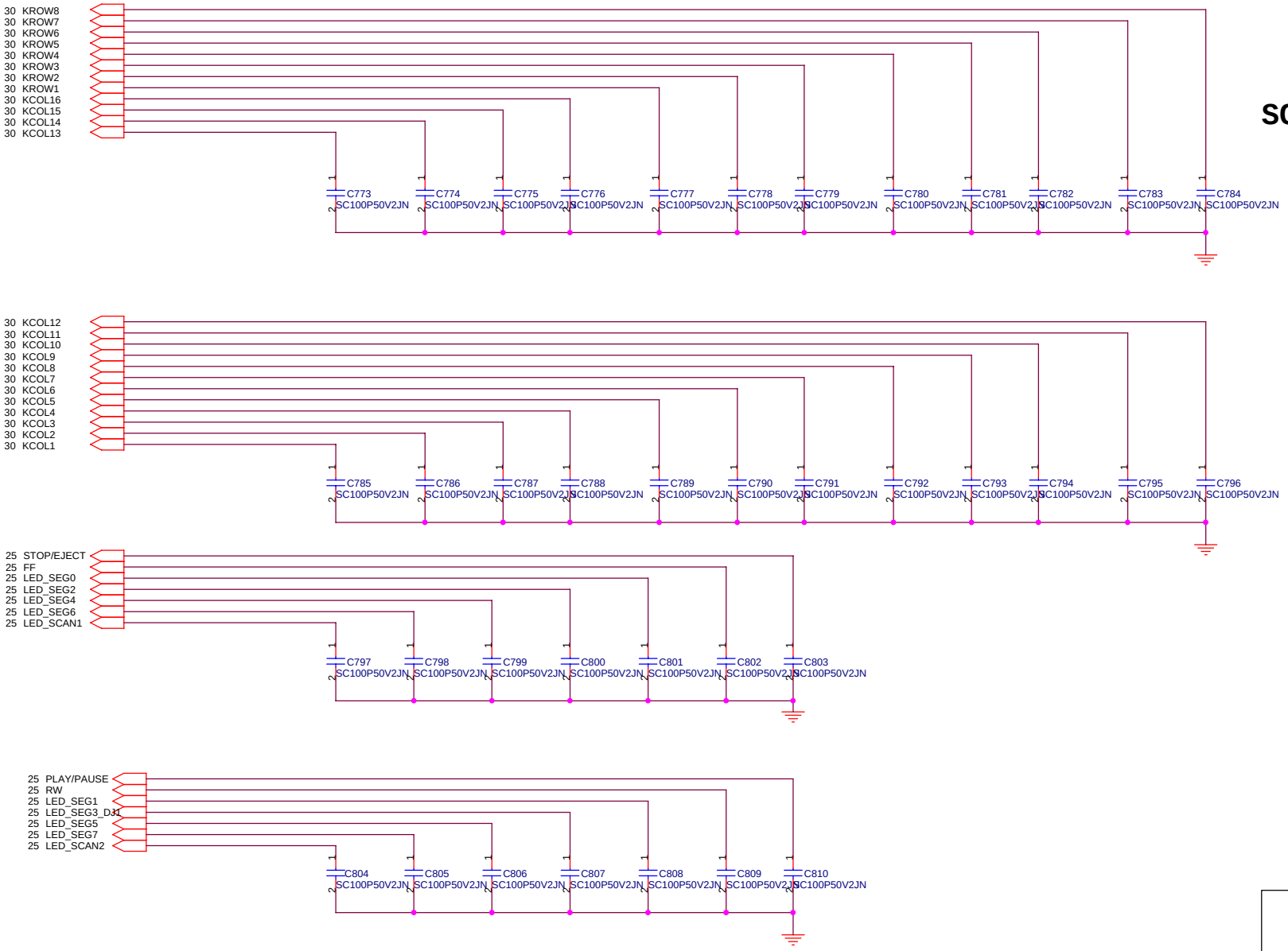



緯創資通 **Wistron Corporation**
21F, 88, Sec.1, Hsin Tai Wu Rd., Hsichih,
Taipei Hsien 221, Taiwan, R.O.C.


| | | |
|---|---|---|
| Title | ***TEST POINT*** | |
| Size: Custom | Document Number: B2M | Rev: **SC** |
| Date: Thursday, January 16, 2003 | Sheet 43 of 43 | |